Technical Data Sheet

RACM30-K/277 Series ◊ AC/DC Power Supply

30W ◊ Universal Input 100V-277VAC

RECOM
AC/DC Converter

FEATURES

- OVC III up to 5000m and LPS
- Meets EN55032 “B” floating or earth coupled load
- Full load power: -40 to +60°C
- Reduced load rating to 90°C
- Industry standard pinning [P12]
- Medical; household & industrial standards
- PCB-mount; chassis and DIN-rail mount options
- 3 year warranty





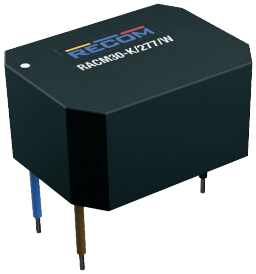



APPLICATIONS

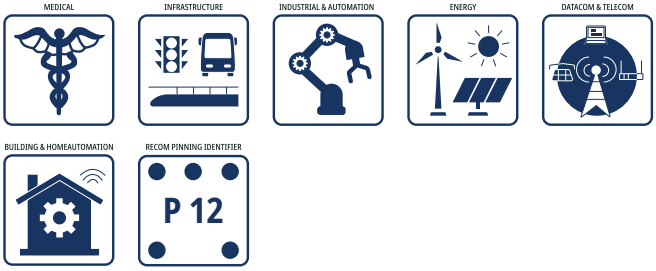

SAFETY & EMC

CE
cULus E314885
IECEE CB SCHEME
HOUSEHOLD CERTIFIED EN-60335-1
ERP
RoHS² compliant 10 from 10
Reach compliant

DESCRIPTION

RACM30-K/277 AC/DC modules provide a leading thermally effective Power yield of 9.2 Watts per inch³ at 60°C still air for continuous loads of 30 Watts plus additional peak capability. These Modules operate in a temperature range of -40° to 90°C in compliance with safety standards of medical MOPP, household-, industrial, and measurement markets. Safety reports rate the series as LPS limited power source and OVCIII for an operating altitude of up to 5000m. Outputvoltages of 5V up to 54V can supply controller boards, sensors, actuators up to PoE+ power injectors per IEEE 802.at. A comfortable margin to EMI Class B limits, even with outputs connected to the ground, ease system implementation for quick time-to-market without additional external circuitry such as fuses or filters. For designers, maximum flexibility for these encapsulated, “THT”-through hole technology solder-mountable modules is pin-to-pin compatible with the well-established series RAC20-K. Further mechanical derivatives are potted modules with wires or a panel mount option with spring-clamp connectors which is convertible to DIN-Rail mounting via available RECOM Clip accessory.

SELECTION GUIDE

Part Number	Input Voltage Range [VAC]	Output Voltage nom. [VDC]	Output Current max. [mA]	Efficiency typ. (1) [%]	Max. Capacitive Load (2) [µF]
RACM30-05SK/277	85-305	5	6000	86	10000
RACM30-12SK/277	85-305	12	2500	90	10000
RACM30-15SK/277	85-305	15	2000	90	10000
RACM30-24SK/277	85-305	24	1250	89	8000
RACM30-12DK/277	85-305	±12	±1250	86	±8000
RACM30-15DK/277	85-305	±15	±1000	86	±8000
RACM30-36SK/277	85-305	36	833	88	3000
RACM30-48SK/277	85-305	48	625	88	2000
RACM30-54SK/277	85-305	54	556	88	2000

Note1: Efficiency is tested at nominal input (230VAC) and full load at +25°C ambient

Note2: Measured @ T_{AMB}= 25C°, nom. V_{IN}, full load and after warm-up unless otherwise stated

copyright © RECOM Power GmbH, all rights reserved

RACM30-K/277 Series ◊ AC/DC Power Supply

30W ◊ Universal Input 100V-277VAC

RECOM AC/DC Converter

MODEL NUMBERING



Note3: without suffix = THT-solder mount, encapsulated
add suffix "/PMP" = panel mount version with push-in terminals
add suffix "/PMA" = panel mount version with 45° angled push-in terminal
add suffix "/W" for wired version (single output only), encapsulated, potted
add suffix "/OF" = standard 38.1mm x 76.2mm (1.5"x3") open frame version with header connectors

Note4: For other case/connection/footprint options, please contact RECOM Tech-Support.

ACCESSIBLE PART

Part Number	Description	Datasheet Link
RAC-ADAPT-ST-1	adapter board with screw terminals for easy connection	RAC-ADAPT-ST-1.pdf
R-DR/Clip	Din Rail mounting clip only for "/PMP" and "/PMA"	R-DR/CLIP.pdf

ORDERING INFORMATION

Model	nom. Output Voltage	Single/Dual	Package Type Suffix				
			THT-solder mount	"/PMP"	"/PMA"	"/W"	"/OF"
RACM30-05SK/277	5VDC	Single	x	x	on request	x	x
RACM30-12SK/277	12VDC	Single	x	x	x	x	x
RACM30-15SK/277	15VDC	Single	x	N/A	x	x	x
RACM30-24SK/277	24VDC	Single	x	x	on request	x	x
RACM30-36SK/277	36VDC	Single	x	N/A	on request	on request	x
RACM30-48SK/277	48VDC	Single	x	N/A	x	on request	x
RACM30-54SK/277	54VDC	Single	x	N/A	x	x	N/A
RACM30-12DK/277	±12VDC	Dual	x	on request	N/A	N/A	x
RACM30-15DK/277	±15VDC	Dual	x	on request	N/A	N/A	x

x= standard portfolio / on request= MOQ may apply on project base / N/A= not available

BASIC CHARACTERISTICS (measured @ T_{AMB}= 25°C, nom. V_{IN}, full load and after warm-up unless otherwise stated)

Parameter	Condition		Min.	Typ.	Max.
Internal Input Filter					Pi Type
Nominal Input Voltage	50/60Hz		100VAC		277VAC
Operating Range (5, 6)	47-63Hz		85VAC	230VAC	305VAC
	DC		120VDC		430VDC
Input Current	V_{IN}= 115VAC				650mA
	V_{IN}= 230VAC				350mA
	V_{IN}= 277VAC				300mA
Inrush Current	cold start at +25°C	V_{IN}= 115VAC			20A
		V_{IN}= 230VAC			30A
		V_{IN}= 277VAC			36A
No Load Power Consumption	at +25°C	230VAC			100mW
Ecodesign Standby Mode Use (Available output power for stated input power)	V_{IN}= 230VAC	P_{IN}= 0.3W			0.22W
		P_{IN}= 0.5W			0.39W
		P_{IN}= 1W			0.79W
Input Frequency Range			47Hz		63Hz
Minimum Load			0%		
Power Factor	V_{IN}= 115VAC			0.6	
	V_{IN}= 230VAC			0.5	
	V_{IN}= 277VAC			0.45	

copyright © RECOM Power GmbH, all rights reserved

BASIC CHARACTERISTICS (measured @ T_{AMB}= 25°C, nom. V_{IN}, full load and after warm-up unless otherwise stated)

Parameter	Condition		Min.	Typ.	Max.
Start-up time	V_{IN}= 230VAC				150ms
Rise time	V_{IN}= 230VAC				30ms
Hold-up time	V_{IN}= 230VAC		50ms		
Internal Operating Frequency	100% load at nominal V_{IN}				100kHz
Output Ripple and Noise [7]	20MHz BW, +25°C	others			100mVp-p
		54VDC			200mVp-p

Note5: The products were submitted for safety files at AC-Input operation, and to IEC/EN61010-1 for DC-operation.
Note6: The selection of a system-adapted DC fuse in the input circuit is recommended
Note7: Measurements are made with a 0.1µF MLCC & 10µF E-cap in parallel across output. (low ESR)

RACM30-05SK/277; RACM30-24SK/277

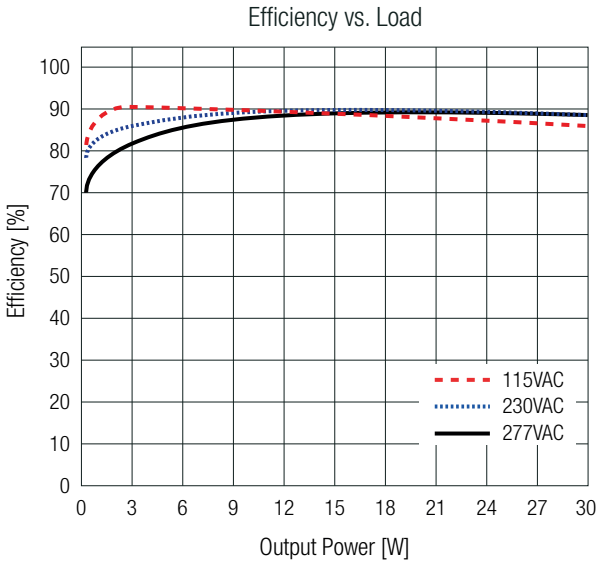

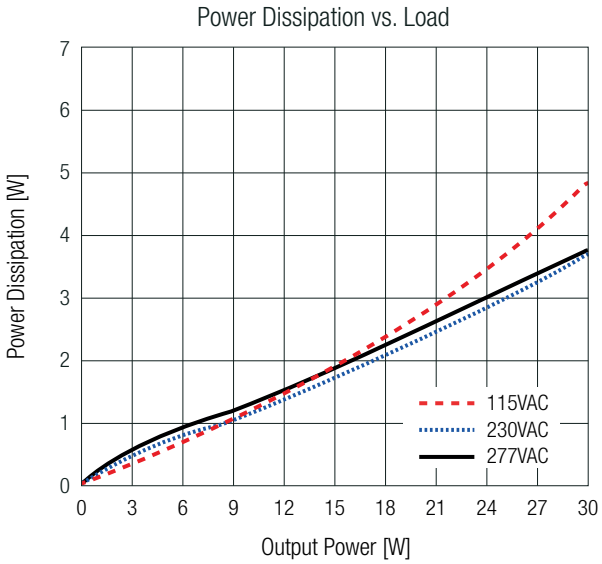

RACM30-12SK/277; RACM30-15SK/277

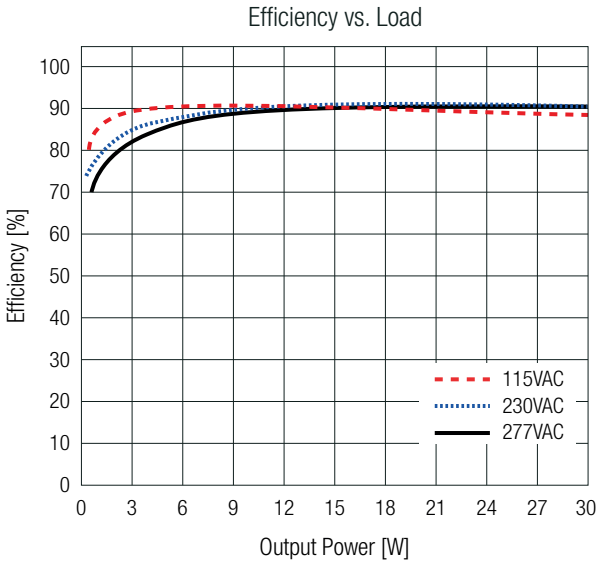

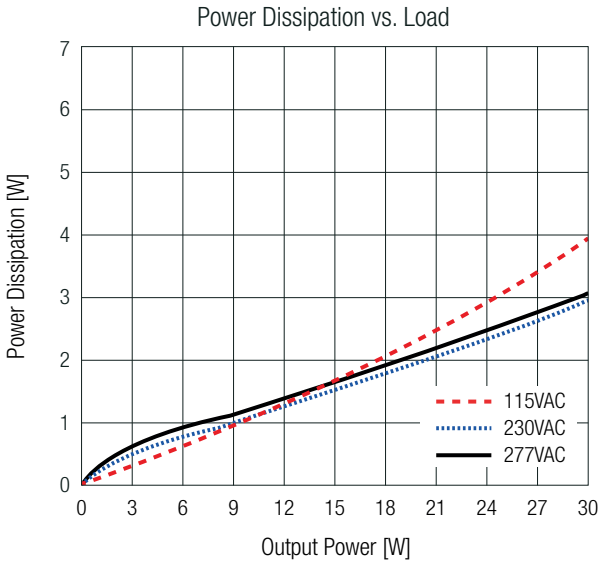

copyright © RECOM Power GmbH, all rights reserved

BASIC CHARACTERISTICS (measured @ T_{AMB}= 25°C, nom. V_{IN}, full load and after warm-up unless otherwise stated)

RACM30-12DK/277; RACM30-15DK/277

Efficiency vs. Load

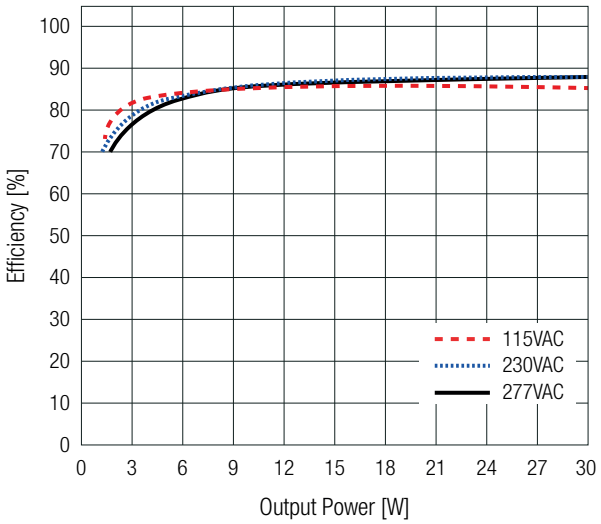

Power Dissipation vs. Load

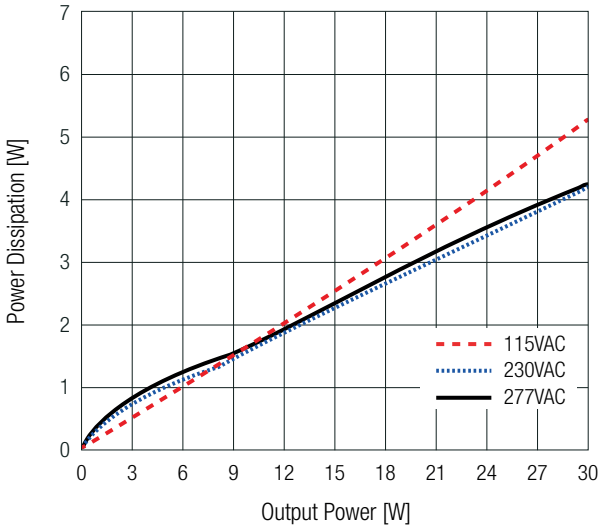

RACM30-36SK/277; RACM30-48SK/277; RACM30-54SK/277

Efficiency vs. Load

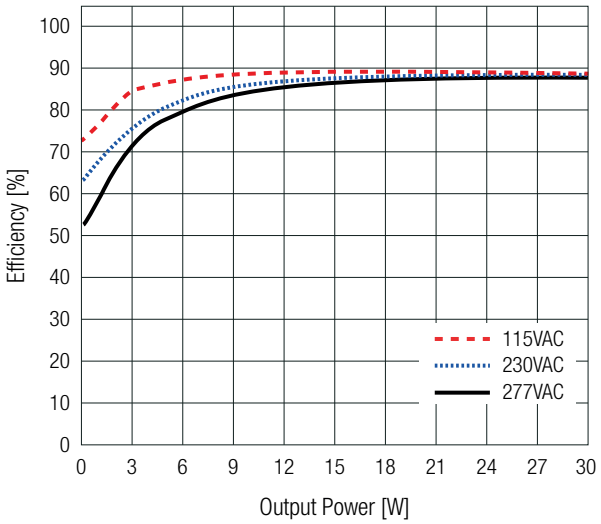

Power Dissipation vs. Load

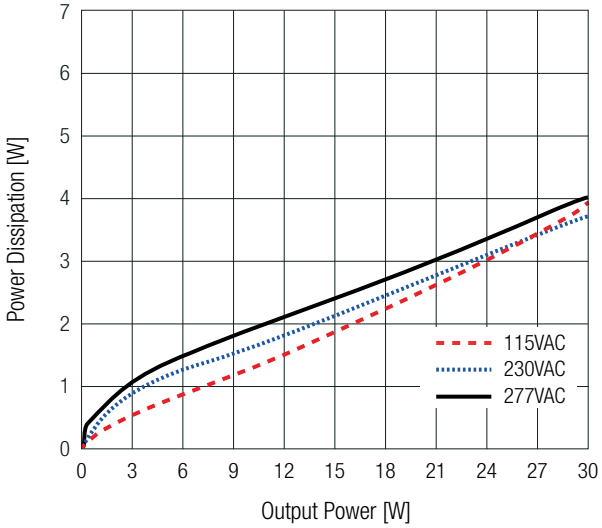

REGULATIONS (measured @ T_{AMB}= 25°C, nom. V_{IN}, full load and after warm-up unless otherwise stated)

Parameter	Condition		Value
Output Accuracy	single output		±2.0% typ.
	dual output		±3.0% typ.
Line Regulation	low line to high line	5VDC	±1.0% typ.
		others	±0.5% typ.
		48, 54VDC	±1.5% typ.
Load Regulation [8]	10% to 100% load	5VDC	3.0% typ.
		others	1.0% typ.
		54VDC	±1.5% typ.
Cross Regulation	dual output only		±10.0% typ.
Transient Response	25% load step change		4.0% max.
	recovery time		500µs typ.

Note8: Operation below 10% load will not harm the converter, but specifications may not be met

copyright © RECOM Power GmbH, all rights reserved

PROTECTIONS (measured @ T_{AMB}= 25°C, nom. V_{IN}, full load and after warm-up unless otherwise stated)

Parameter	Type		Value
Internal Input Fuse [9]			T3.15A, slow blow type
Short Circuit Protection (SCP)			hiccup, auto recovery
Over Voltage Protection (OVP)	others		150% - 195%, hiccup mode
	36, 48, 54VDC		120% - 195%, hiccup mode
Over Current Protection (OCP)	others		<180%, hiccup mode
	36, 48, 54VDC		<200%, hiccup mode
Over Voltage Category (OVC II, OVC III, OVC IV @ 100-150VAC Input)	THT-solder mount; "/W"; "/PMP"; "/PMA"		OVC III (5000m)
	"/OF"		OVC III (3000m) / OVC II (5000m)
DC ON LED	only for "/PMP" and "/PMA"		green
Class of Equipment			Class II
Isolation Voltage [10]	I/P to O/P, I/P to case, O/P to case	1 minute	4kVAC
Isolation Resistance	V_{ISO}= 500VDC		1GΩ min.
Isolation Capacitance	I/P to O/P, 100kHz/0.1V		100pF max.
Insulation Grade	I/P to O/P		reinforced
Means of Protection	I/P to O/P		2MOPP
Medical Device Classification	built-in power supply		designed to support type BF applications
Touch Current	264VAC/63Hz	normal condition	<100µA
		single fault	<500µA

Note9: For system integration with DC operation, consider a suitable DC fuse in front of the input
Note10: For repeat Hi-Pot testing, reduce the time and/or the test voltage

ENVIRONMENTAL (measured @ T_{AMB}= 25°C, nom. V_{IN}, full load and after warm-up unless otherwise stated)

Parameter	Condition				Value
Operating Ambient Temperature Range	@ natural convection (0.1m/s)	refer to **„Derating Graph"**			-40°C to +90°C
Maximum Case Temperature					+110°C
Temperature Coefficient					0.02%/K
Operating Altitude [11]	according to 62368-1, 60601-1, 61558				5000m
Operating Humidity	non-condensing				90% RH max.
Pollution Degree	THT-solder mount; "/W"; "/PMP"; "/PMA"				PD3
	"/OF"				PD2
Vibration	according to MIL-STD-202G				10-500Hz, 2G 10min./1cycle, period 60min. each along x,y,z axes
	THT-solder mount models only	according to IEC 60068-2-27			3 axis, 40 g half sine, 11 ms shock
		according to IEC 60068-2-65			5-500Hz, 20m/s², 1 Oct/min, 15min
		according to IEC 60068-2-64			10-500Hz; RMS 23,4m/s² ; 15min
MTBF	according to MIL-HDBK-217, G.B.	THT-solder mount; "/W"; "/PMP"; "/PMA"		T_{AMB}= +25°C	>1357 x 10^3 hours
				T_{AMB}= +40°C	>1096 x 10^3 hours
		"/OF"		T_{AMB}= +25°C	>1115 x 10^3 hours
				T_{AMB}= +40°C	>873 x 10^3 hours
Design Lifetime	230VAC/50Hz and full load	THT-solder mount; "/W"; "/PMP"; "/PMA"	single output 5VDC	T_{AMB}= +45°C	>30 x 10^3 hours
			single output others	T_{AMB}= +50°C	
			dual outputs	T_{AMB}= +40°C	>30 x 10^3 hours
				T_{AMB}= +50°C	>17 x 10^3 hours
		"/OF"	5VDC	T_{AMB}= +45°C	>30 x 10^3 hours
			others	T_{AMB}= +50°C	

Note11: Recognized by safety agency for safe operation up to 5000m. High altitude operation may impact the performance and lifetime.

copyright © RECOM Power GmbH, all rights reserved

ENVIRONMENTAL (measured @ T_{AMB}= 25°C, nom. V_{IN}, full load and after warm-up unless otherwise stated)

Derating Graph

(@ Chamber and natural convection 0.1m/s)

RACM30-05SK/277 (/W; /PMP; /PMA)

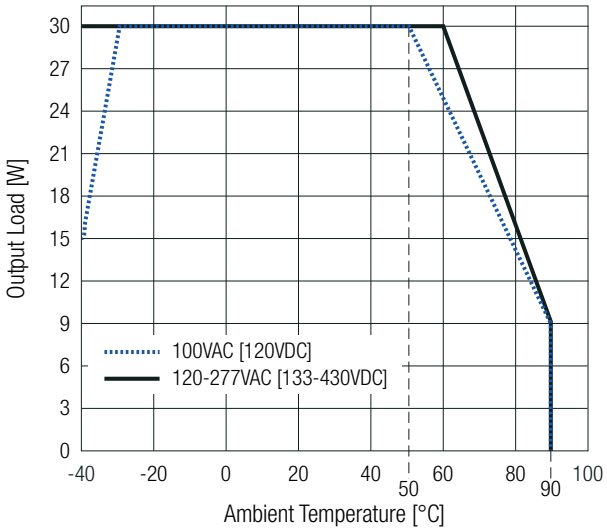

RACM30-xxS(D)K/277 (/W; /PMP; /PMA) others

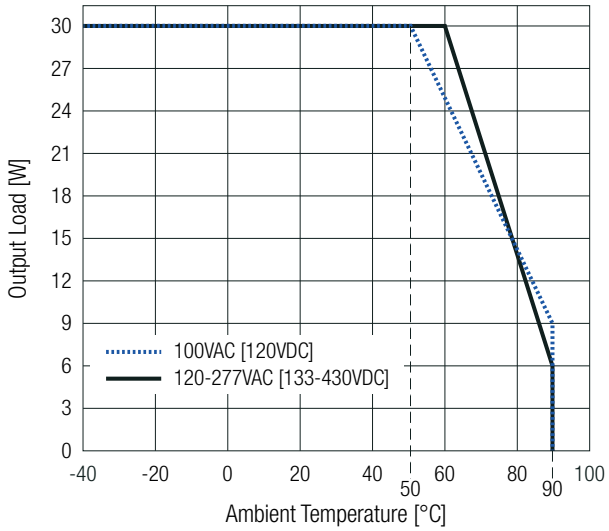

RACM30-05SK/277/OF

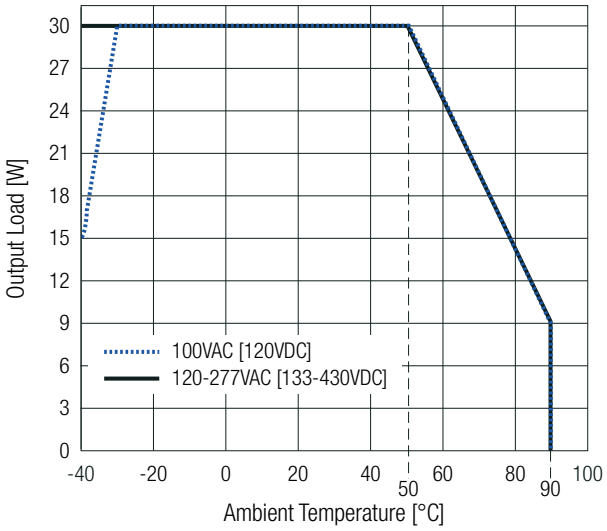

RACM30-xxSK/277/OF others

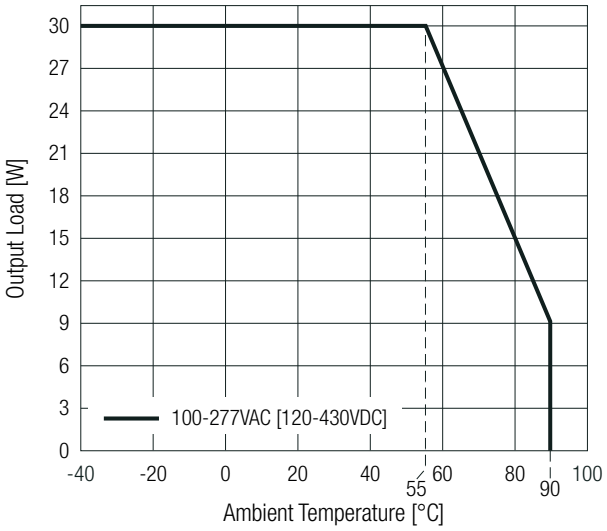

RACM30-xxDK/277/OF

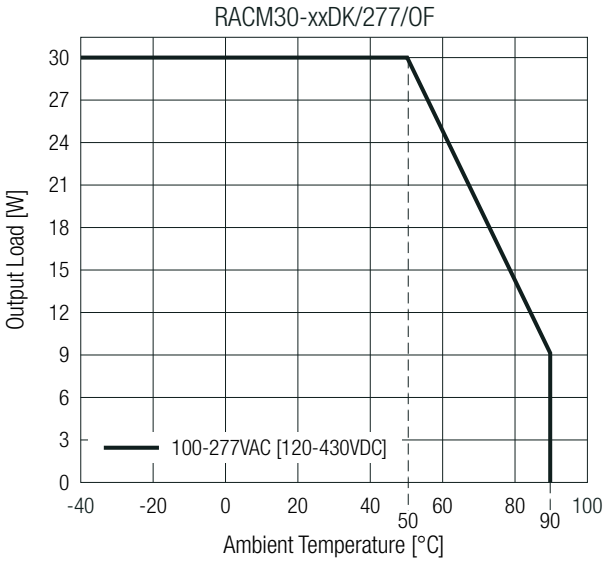

copyright © RECOM Power GmbH, all rights reserved

PEAK LOAD CAPABILITY (SINGLE OUTPUT ONLY)

Calculation:

P_{nom} = nom. output power (30) [W]
P_P = peak output power (see table) [W]
P_r = recovery output power [W]
t_1 = peak time set (10s max.) [s]
t_2 = recovery time (min. 5 x t_1) [s]
k = safety factor 1.1 [ ]

$$P_r = \frac{P_{nom} \times (t_1 + t_2) - (P_P \times t_1)}{t_2 \times k}$$

Maximum Peak Power

nom. V_{OUT}= 5VDC - 12VDC	33W
nom. V_{OUT}= 15VDC - 54VDC	36W

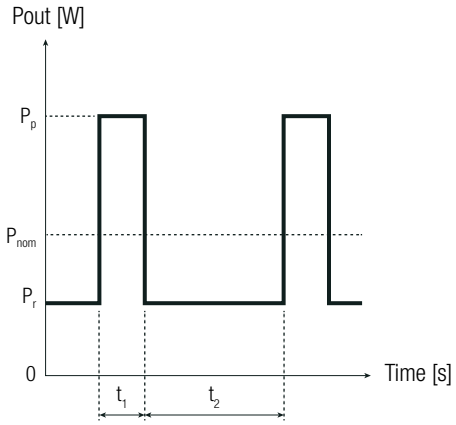

Practical Example (RACM30-24SK/277):

Take the RACM30-24SK/277 at 230VAC input and full load at T_{AMB}= 25°C, with natural convection.

P_P = 36W
t_1 = 10s
t_2 = 50s
k = 1.1

$$P_r = \frac{30 \times (10 + 50) - (36 \times 10)}{50 \times 1.1} = 26.2W$$

SAFETY & CERTIFICATIONS

Certificate Type (Safety)	Report Number	Standard
Audio/Video, information and communication technology equipment - Part1: Safety requirements (LVD)	64.210.22.02737.02 (except "/OF" and all 36,48,54VDC)	EN62368-1:2014+A11:2017 (2nd Edition)
Audio/Video, information and communication technology equipment - Safety requirements (CB)	085-220273601-200 (THT-solder mount and "/OF" only, except all 36,48,54VDC)	IEC62368-1:2018 (3rd Edition)
Audio/Video, information and communication technology equipment - Safety requirements		EN IEC 62368-1:2020+A11:2020 (3rd Edition)
Audio/Video, information and communication technology equipment - Part1: Safety requirements (CB)	241202007 (except "/PMP; /PMA")	IEC62368-1:2018 (3rd Edition)
Audio/Video, information and communication technology equipment - Part1: Safety requirements		EN IEC 62368-1:2020+A11:2020 (3rd Edition)
Audio/Video, information and communication technology equipment - Part1: Safety requirements	E491408-A6038-UL (except "/PMP; /PMA")	UL62368-1:2019 (3rd Edition) CAN/CSA-C22.2 No. 62368-1-19 (3rd Edition)
Electrical Equipment For Measurement, Control, and Laboratory Use; Part 1: General Requirements (CB)	085-220277601-000 (except "/PMA"; "/OF", and all 36,48,54VDC)	IEC61010-1:2010+A1:2016 3rd Edition with IEC61010-2-201:2017
Electrical Equipment For Measurement, Control, and Laboratory Use; Part 1: General Requirements (LVD)	64.240.22.02776.01 (except "/PMA"; "/OF", and all 36,48,54VDC)	EN61010-1:2010+A1:2019 with EN IEC 61010-2-201:2018
Medical electrical equipment Part 1: General requirements for basic safety and essential performance	E511305-D6005-UL	ANSI/AAMI ES60601-1:2005+A1:2012+A2:2021 (Edition 3.2) CAN/CSA-C22.2 No. 60601-1:14+A2:2022 (Edition 3.2)
Medical electrical equipment Part 1: General requirements for basic safety and essential performance (CB)	23SBDS02017-00882 (except all 36,48,54VDC)	IEC60601-1:2005+C1:2006+C2:2007+AM1:2012 (Edition 3.1)
Medical electrical equipment Part 1: General requirements for basic safety and essential performance		EN60601-1:2006+A1:2013+AC:2014
Medical electrical equipment Part 1: General requirements for basic safety and essential performance (CB)	240830022	IEC60601-1:2005+A1:2012+A2:2020 (Edition 3.2)
Medical electrical equipment Part 1: General requirements for basic safety and essential performance		EN60601-1:2006+A1:2013+A12:2014+A2:2021

copyright © RECOM Power GmbH, all rights reserved

SAFETY & CERTIFICATIONS

Certificate Type (Safety)	Report Number	Standard
Household and similar electrical appliances – Safety – Part 1: General requirements (CB)	085-240715301-000	IEC60335-1:2010+A2:2016 5th Edition
Household and similar electrical appliances – Safety – Part 1: General requirements (LVD)		EN60335-1:2012+A11:2014+A13:2017+A1:2019+A14:2019+A2:2019+A15:2021+A16:2023
Measurement methods for electromagnetic fields of household appliances and similar apparatus with regard to human exposure		EN62233:2008
Safety of power transformers, power supplies, reactors and similar products for supply voltages up to 1100 V (CB)		IEC61558-1:2017 (3rd Edition)
Safety of power transformers, power supplies, reactors and similar products for supply voltages up to 1100 V Part 2: Particular requirements (CB)		EN61558-2-16:2009+A1:2013 (1st Edition)
Safety of power transformers, power supplies, reactors and similar products for supply voltages up to 1100 V (CB)	085-220273801-300	IEC61558-1:2017 (3rd Edition)
Safety of power transformers, power supplies, reactors and similar products for supply voltages up to 1100 V Part 2: Particular requirements (CB)		IEC61558-2-16:2009+A1:2013 (1st Edition)
Safety of power transformers, power supplies, reactors and similar products for supply voltages up to 1100 V (LVD)	64.250.22.02738.03	EN IEC 61558-1:2019 (3rd Edition)
Safety of power transformers, power supplies, reactors and similar products for supply voltages up to 1100 V Part 2: Particular requirements (LVD)		EN61558-2-16:2009+A1:2013
RoHS2		RoHS-2011/65/EU + AM-2015/863

EMC Compliance according to EN60601-1-2	Condition	Standard / Criterion
Medical electrical equipment Part 1-2: General requirements for basic safety and essential performance		EN60601-1-2:2015+A1:2021
ESD Electrostatic discharge immunity test	Air +/-2, 4, 8, 15kV; Contact +/- 8kV	IEC61000-4-2:2008 EN61000-4-2:2009
Radiated, radio-frequency, electromagnetic field immunity test	10 V/m (80-2700MHz), 27V/m (385MHz), 28V/m (450MHz), 9V/m (710, 745, 780MHz), 28V/m (810, 870, 930MHz), 28V/m (1720, 1845, 1970MHz), 28V/m (2450MHz), 9V/m (5240, 5500, 5785MHz)	IEC61000-4-3:2006+A1:2007+A2:2010 EN61000-4-3:2006+A1:2008+A2:2010
Fast Transient and Burst Immunity	AC Power Port L, N, L-N +/-2kV	IEC/EN61000-4-4:2012
Surge Immunity	AC Power Port L-N 0.5, 1, 2kV	IEC/EN61000-4-5:2014+A1:2017
Immunity to conducted disturbances, induced by radio-frequency fields	3, 6Vrms (0.15-80MHz)	IEC61000-4-6:2013 / EN61000-4-6:2014
Voltage Dips	100% (0.5P, 1.0P) 30% (25P,/30P)	IEC/EN61000-4-11:2004+A1:2017
Voltage Interruptions	100% (250P/300P)	IEC/EN61000-4-11:2004+A1:2017
Limits of Voltage Fluctuations & Flicker		EN61000-3-3:2013

EMC Compliance according to /EN55032/EN55035	Condition	Standard / Criterion
Electromagnetic compatibility of multimedia equipment – Emission Requirements	O/P: floating or earth coupled (FE; PE or GND)	EN55032:2015+A11:2020, Class B
Electromagnetic compatibility of multimedia equipment – Immunity requirements		EN55035:2017+A11:2020
Radiated, radio-frequency, electromagnetic field immunity test	3V/m (1800MHz, 2600MHz, 3500MHz, 5000MHz)	IEC61000-4-3:2006+A1:2007+A2:2010, Criteria A EN61000-4-3:2006+A1:2008+A2:2010, Criteria A
Fast Transient and Burst Immunity	AC Power Port L, N, L-N 2kV DC Load Line 0.5kV	IEC61000-4-4:2012 / EN61000-4-4:2012, Criteria A

copyright © RECOM Power GmbH, all rights reserved

SAFETY & CERTIFICATIONS

EMC Compliance according to EN IEC61204-1	Condition	Standard / Criterion
Low voltage power supplies, d.c. output Part 3: Electromagnetic compatibility (EMC)		EN IEC 61204-3:2018, Class B
ESD Electrostatic discharge immunity test	Air +/-2, 4, 8kV; Contact +/- 4kV / AC and DC input	IEC61000-4-2:2008, Criteria A EN61000-4-2:2009, Criteria A
Radiated, radio-frequency, electromagnetic field immunity test	10V/m (80-1000MHz), 3V/m (1400-2000MHz), 1V/m (2000-2700MHz)	IEC61000-4-3:2006+A1:2007+A2:2010, Criteria A EN61000-4-3:2006+A1:2008+A2:2010, Criteria A
Fast Transient and Burst Immunity	AC Power Port: L, N, L-N ±2kV, Criteria B (except 36V, 48V, 54V) AC Power Port: L, N, L-N ±2kV, Criteria A (36V and 54V) AC Power Port: L, N, L-N +2kV / Criteria A (48V only) AC Power Port: L, N -2kV / Criteria A (48V only) AC Power Port: L-N -2kV / Criteria B (48V only)	IEC61000-4-4:2012 EN61000-4-4:2012
Surge Immunity	AC Power Port: L-N 0.5, 1, 2kV	IEC/EN61000-4-5:2014+A1:2017, Criteria A
Immunity to conducted disturbances, induced by radio-frequency fields	10Vrms (0.15-80MHz)	IEC61000-4-6:2013, Criteria A EN61000-4-6:2014, Criteria A
Power Magnetic Field Immunity	EN61204-3: 30A/m	IEC61000-4-8:2009, Criteria A EN61000-4-8:2010, Criteria A
Voltage Dips	100% (0.5P, 1.0P) 60% (36V, 48V, 54V) 20% & 30%	IEC/EN61000-4-11:2004+A1:2017, Criteria A
	60% (except 36V, 48V, 54V)	IEC/EN61000-4-11:2004+A1:2017, Criteria B
Voltage Interruptions	100%	IEC/EN61000-4-11:2004+A1:2017, Criteria B
Limits of Harmonic Current Emissions		EN IEC 61000-3-2:2019
Limits of Voltage Fluctuations & Flicker		EN61000-3-3:2013+A1:2019

EMC Compliance according to EN55014-1/EN55014-2	Condition	Standard / Criterion
Electromagnetic compatibility - Requirements for household appliances, electric tools and similar apparatus - Part 1: Emission		EN55014-1:2017
Electromagnetic compatibility - Requirements for household appliances, electric tools and similar apparatus - Part 2: Immunity		EN55014-2:2015
Immunity to conducted disturbances, induced by radio-frequency fields	3Vrms (0.15-230MHz)	IEC61000-4-6:2013, Criteria A EN61000-4-6:2014, Criteria A

DIMENSION & PHYSICAL CHARACTERISTICS

Parameter	Type	Value
Materials	case/baseplate	plastic, (UL94-V0)
	potting	PU, (UL94-V0)
	PCB	FR4, (UL94-V0)
Dimension (LxWxH)	THT-solder mount; "/W"	52.5 x 40.0 x 25.5mm 2.0 x 1.5 x 1.0 inch
	"/PMP"; "/PMA"	84.7 x 40.0 x 33.0mm 3.3 x 1.5 x 1.3 inch
	"/OF"	76.2 x 38.1 x 25.0mm 3.0 x 1.5 x 0.98 inch
Weight	THT-solder mount	93g / 0.21 lbs
	"/PMP"; "/PMA"	122g / 0.27 lbs
	"/W" including wires	98g / 0.22 lbs
	"/OF"	49g / 0.11 lbs

copyright © RECOM Power GmbH, all rights reserved

DIMENSION & PHYSICAL CHARACTERISTICS

THT-solder mount version SINGLE and DUAL Output (mm)

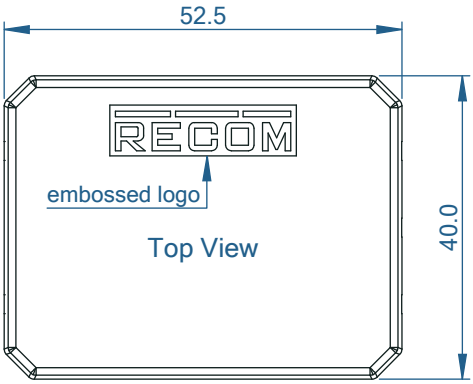



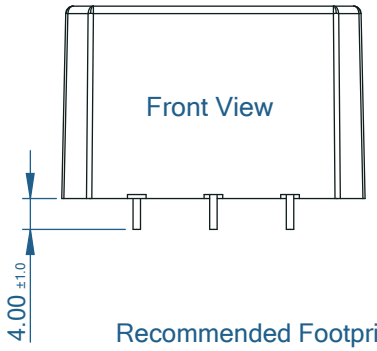

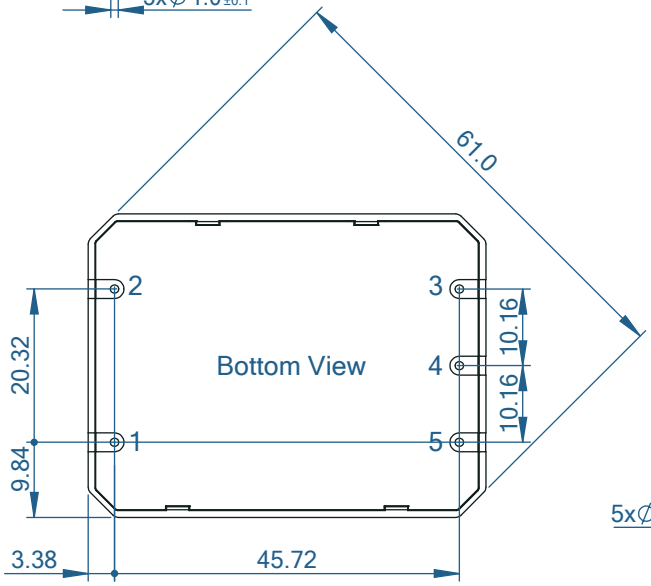

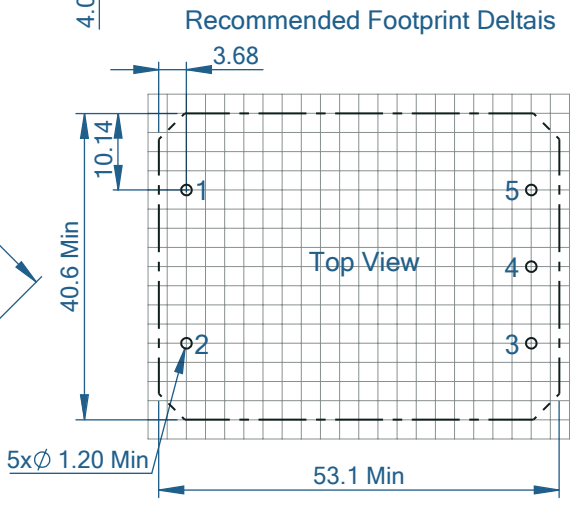

Pinning information [P12]

Pin #	Single	Dual
1	VAC in (N)	VAC in (N)
2	VAC in (L)	VAC in (L)
3	no pin	-Vout
4	-Vout	Com
5	+Vout	+Vout

Tolerance:
x.x= ±0.5mm
x.xx= ±0.25mm

copyright © RECOM Power GmbH, all rights reserved

DIMENSION & PHYSICAL CHARACTERISTICS

Wired version "/W" SINGLE Output (mm)

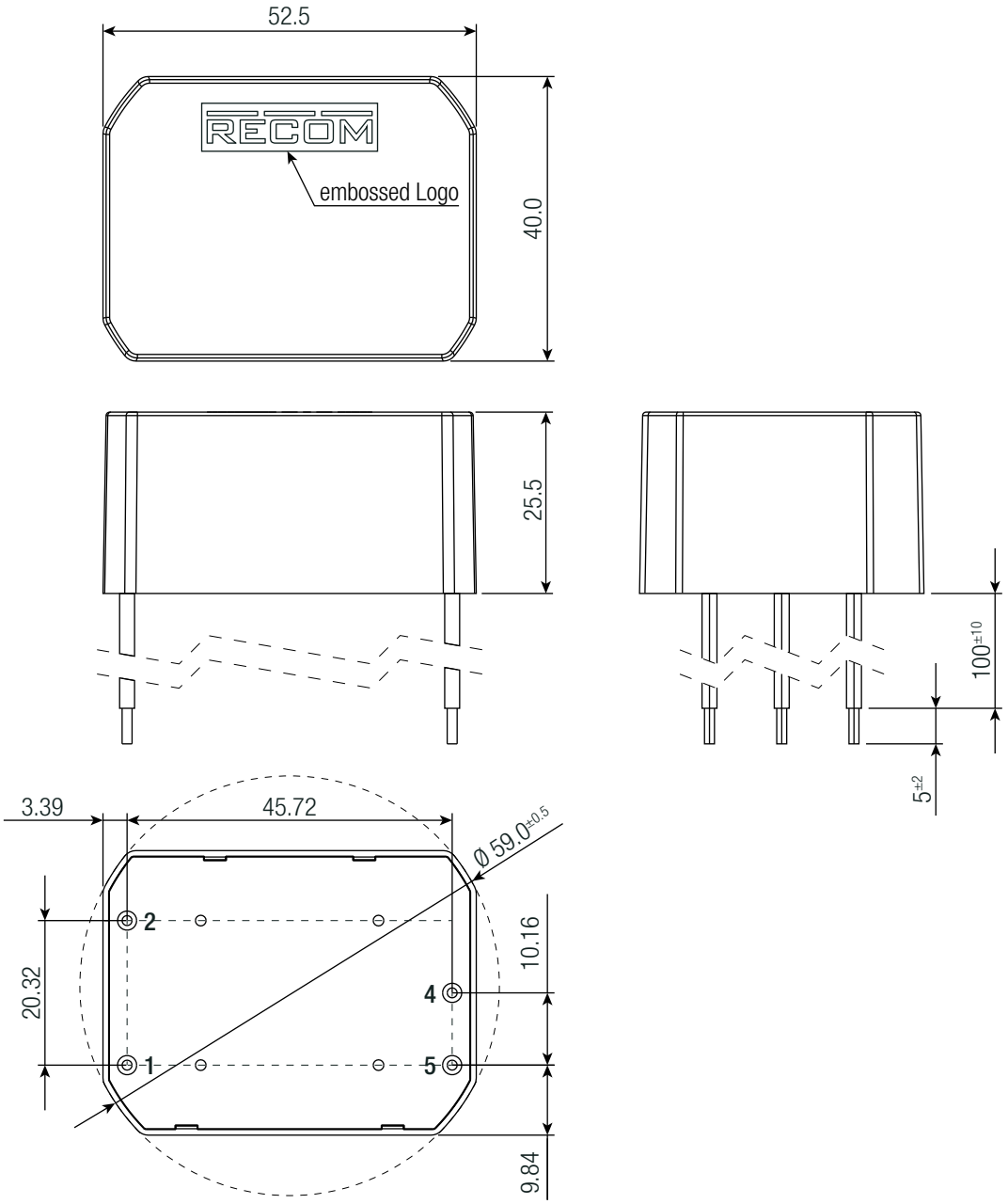

Wire information

#	Function	Wire color	Type	AWG
1	VAC in (N)	blue	UL-1015	18
2	VAC in (L)	brown	UL-1015	18
4	-Vout	black	UL-1015	18
5	+Vout	red	UL-1015	18

Tolerance:
x.x= ±0.5mm
x.xx= ±0.25mm

copyright © RECOM Power GmbH, all rights reserved
www.recom-power.com

DIMENSION & PHYSICAL CHARACTERISTICS

Open Frame "/OF" SINGLE Output (mm)

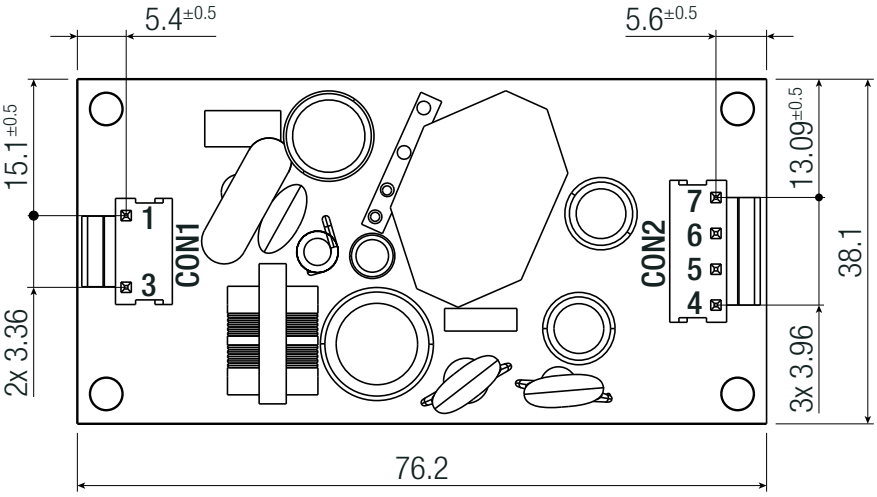

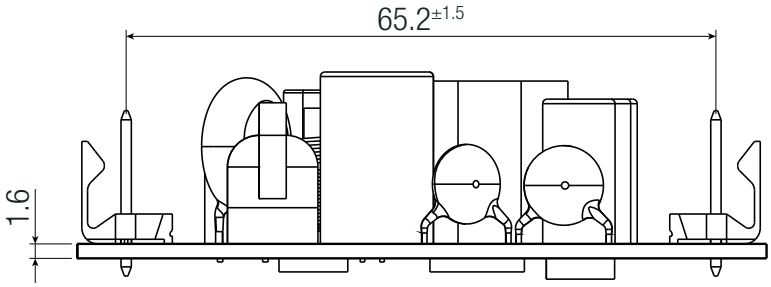

Connector Information - SINGLE

#	Function	Connector
	AC Input (CON1)	
1	VAC in (L)	Molex 26-62-4030
3	VAC in (N)	(Pin2 removed)
	DC Output Connector (CON2)	
4, 5	+Vout	Molex 26-60-4040
6, 7	-Vout	

FC= fixing centers

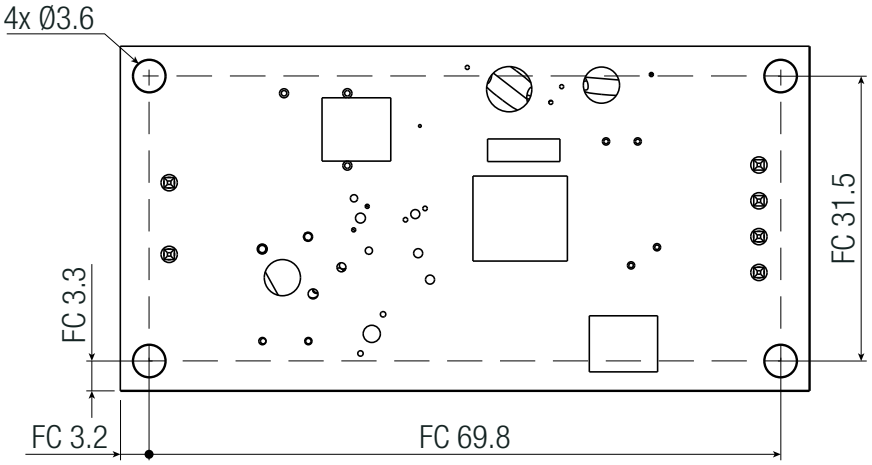

Compatible Connector
Housing
Molex 41695 Series or equivalent
Crimp Terminal
Molex 2478 Series or equivalent

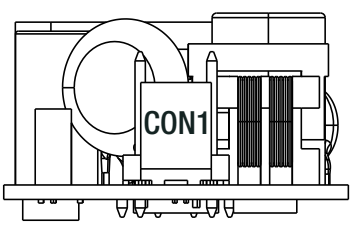

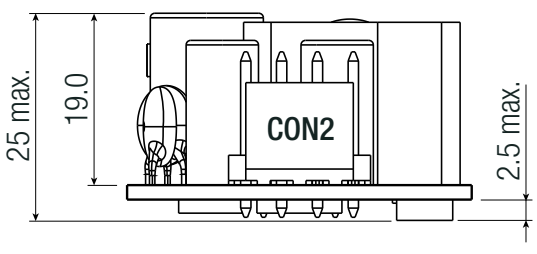

Tolerance:
x.x= ±0.5mm
x.xx= ±0.25mm

copyright © RECOM Power GmbH, all rights reserved

DIMENSION & PHYSICAL CHARACTERISTICS

Open Frame "/OF" DUAL Output (mm)

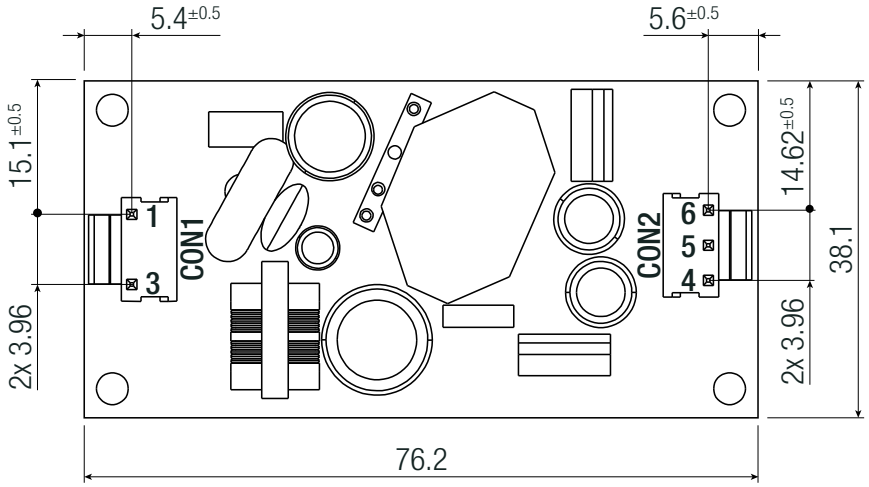

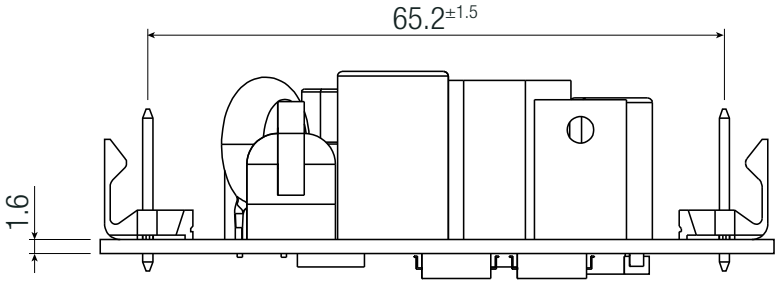

Connector Information - DUAL

#	Function	Connector
	AC Input (CON1)	
1	VAC in (L)	Molex 26-62-4030
3	VAC in (N)	(Pin2 removed)
	DC Output Connector (CON2)	
4	+Vout	Molex 26-60-4030
5	Com	
6	-Vout	

FC= fixing centers

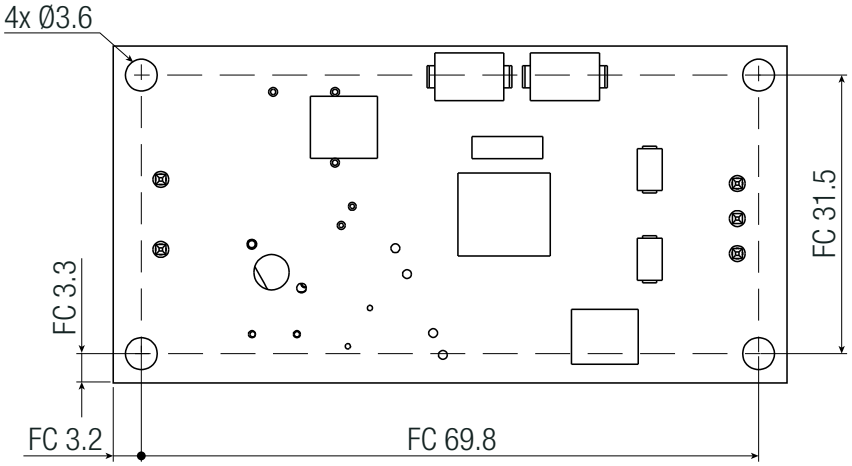

Compatible Connector
Housing
Molex 41695 Series or equivalent
Crimp Terminal
Molex 2478 Series or equivalent

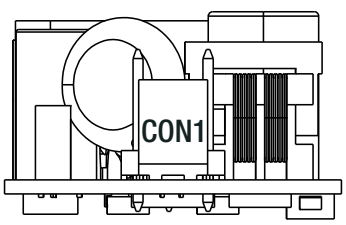

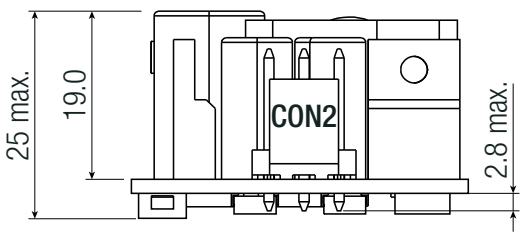

Tolerance:
x.x= ±0.5mm
x.xx= ±0.25mm

copyright © RECOM Power GmbH, all rights reserved

RACM30-K/277 Series ◊ AC/DC Power Supply

30W ◊ Universal Input 100V-277VAC

AC/DC Converter

DIMENSION & PHYSICAL CHARACTERISTICS

Panel Mount "/PMP" SINGLE Output (mm)

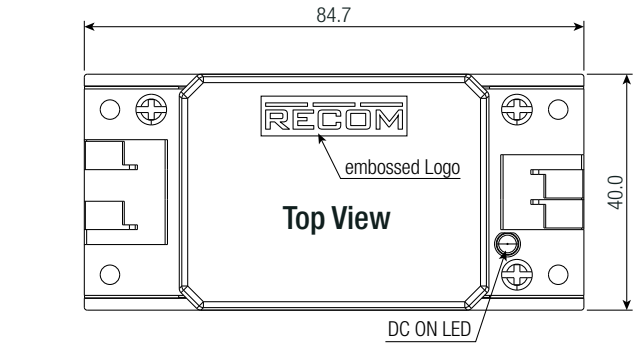

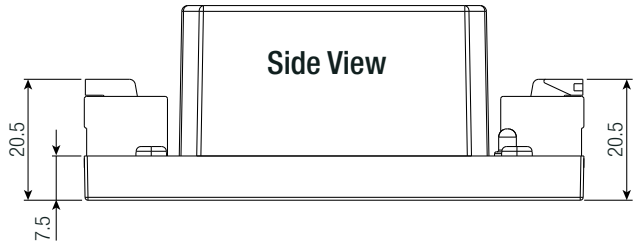

AC Input Side

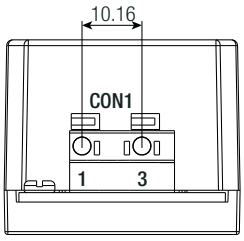

DC Output Side

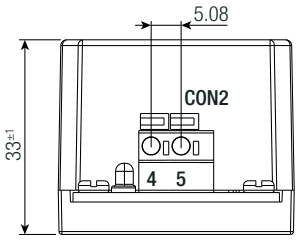

Push-In Spring Terminal

#	Function	Pitch
	AC Input (CON1)	
1	VAC in (N)	10.16mm pitch
3	VAC in (L)	pin2 removed
	DC Output (CON2)	
4	-Vout	2 pins
5	+Vout	5.08mm pitch

Terminal Information
AC Input (CON1)
Degson (DG142R-5.08-02P-2Y)
DC Output (CON2)
Degson (DG142R-5.08-02P-1Y)

Wire stripping length: 11mm
Wire cross section: 22-16AWG (0.2-1.5mm²)
Usable wire cable: Solid and stranded
FC= fixing centers

Panel Mount "/PMA" SINGLE Output (mm)

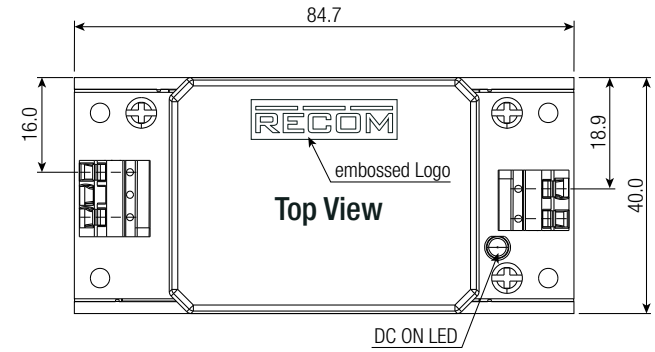

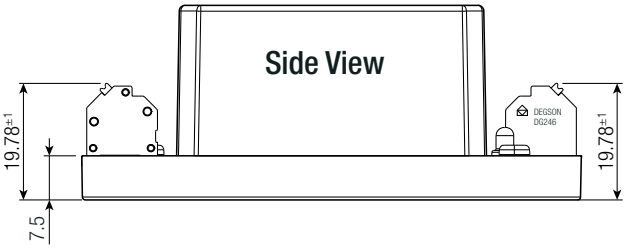

AC Input Side

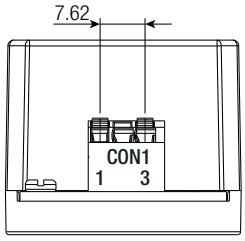

DC Output Side

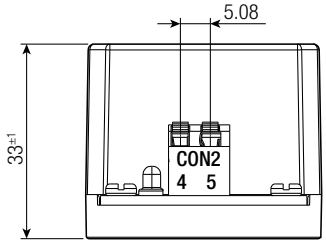

Push-In Spring Terminal

#	Function	Terminal
	AC Input (CON1)	
1	VAC in (N)	7.62mm pitch
3	VAC in (L)	pin2 removed
	DC Output Connector (CON2)	
4	-Vout	2pins
5	+Vout	5.08mm pitch

Terminal Information
AC Input (CON1)
Degson (DG246-3.81-02P-24)
DC Output (CON2)
Degson (DG246-5.08-02P-14)

Wire stripping length: 10mm
Wire cross section: 22-16AWG (0.2-1.5mm²)
Usable wire cable: Solid and stranded
FC= fixing centers

2x M3x0.5 threads for RECOM accessory R-DR/CLIP din rail clip
Recommended countersunk head screw= M3x0.5
Recommended penetration: 6±0.25mm, Maximum tightening torque: 0.7Nm

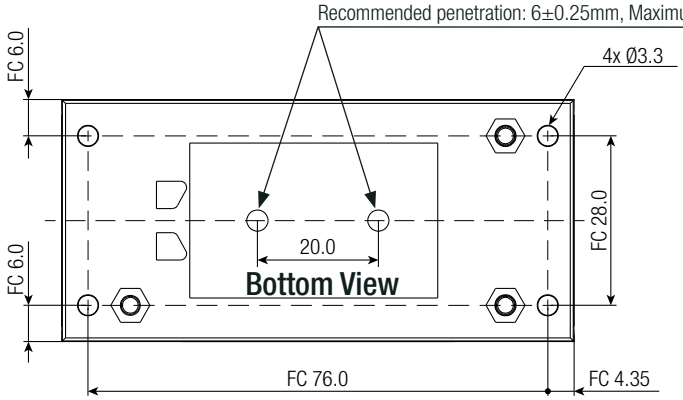

Tolerance:
x.x= ±0.5mm
x.xx=0.25mm

copyright © RECOM Power GmbH, all rights reserved

INSTALLATION AND APPLICATION

RACM30-K/277/PMP after conversion with the RECOM Din Rail Clip "R-DR/CLIP" accessory part

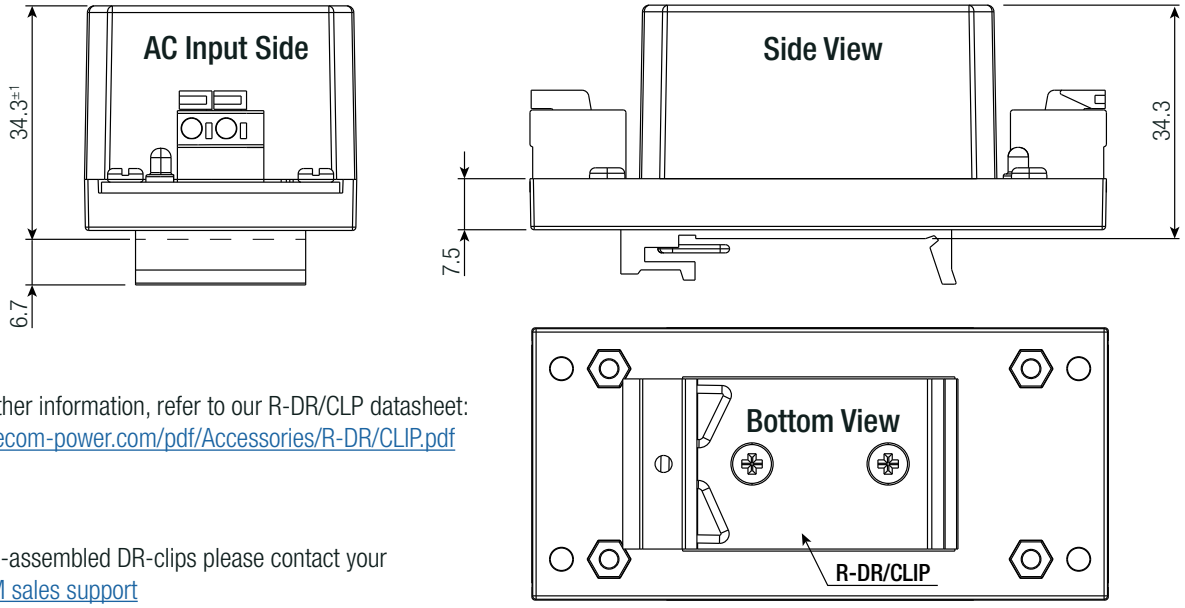

For further information, refer to our R-DR/CLP datasheet:
www.recom-power.com/pdf/Accessories/R-DR/CLIP.pdf

For pre-assembled DR-clips please contact your
RECOM sales support

PACKAGING INFORMATION

Parameter	Type		Value
Packaging Dimension (LxWxH)	tube	THT-solder mount	490.0 x 56.0 x 40.0mm
	tray	"/W"; "/PMP"; "/PMA"	405.0 x 360.0 x 55.0mm
		"/OF"	360.0 x 205.0 x 50.0mm
Packaging Quantity	THT-solder mount		11pcs
	"/W"; "/PMP"; "/PMA"		24pcs
	"/OF"		12pcs
Storage Temperature Range			-40°C to +90°C
Storage Humidity	non-condensing		95% RH max.

The product information and specifications may be subject to changes even without prior written notice. The product has been designed for various applications; its suitability lies in the responsibility of each customer. The products are not authorized for use in safety-critical applications without RECOM's explicit written consent. A safety-critical application is an application where a failure may reasonably be expected to endanger or cause loss of life, inflict bodily harm or damage property. The applicant shall indemnify and hold harmless RECOM, its affiliated companies and its representatives against any damage claims in connection with the unauthorized use of RECOM products in such safety-critical applications.

copyright © RECOM Power GmbH, all rights reserved