Technical Data Sheet

RACPRO1-T480 Series ◊ 3AC DIN-Rail Power Supply

480W ◊ Input: 400-480VAC nom. / 450V-815VDC

RECOM
AC/DC Converter

FEATURES

- Slim Design (52mm) with 25° Push-In connectors
- Fast tool-less mounting and demounting
- PFC >0.9 and Active Inrush Current Limitation
- DC-Input Range 430V to 815V/850V 10s
- Highest Efficiency up to 95.3%
- Full Power -40°C/+60°C, Boost Power 150%/7.5s
- Thermal Power Bonus 120%/45°C
- CC/CV Mode & Parallel Operation, DC-OK-Signal
- Highest Lifetime Expectancy 80.000h/40°C
- Reduced no load power consumption 1.9W-3W
- Extended surge immunity 2.5kV/6kV
- SEMI F47-0706 Sec. 7.1 conform
- Made in Europe with 3 year warranty



Dimensions (HxWxD): 135.0 x 52.0 x 155.7mm (5.3 x 2.0 x 6.1 inch)
768g (1.69 lbs)

APPLICATIONS



SAFETY & EMC

RoHS² compliant 10 from 10 | Reach compliant | CE | IECEE CB SCHEME | cULus E224736 | cULus LISTED E470721

DESCRIPTION

The slim RACPRO1-T480 is a high reliability, three phase AC input DIN rail mount power supply with 24V and 48V output variations in extremely compact dimensions of 135 x 155.7mm with a width of only 52mm. It is specially designed for demanding applications in the harsh industrial automation field with an extended mains input surge immunity of up to 6kV and return voltage immunity >35/63V at the output making it suitable for safe operation against back feeding loads like decelerating motors and inductors. These units will deliver up to 480W over the full -40°C to +60°C ambient temperature range with only convection cooling. An Thermal Power Bonus of up to 576W at 45°C plus a power boost of up to 150% for 7.5s makes them suitable for powering highly inductive or capacitive loads. The unique and innovative modern design with 25° push-in connectors allows easy tool-less installation or replacement. The product is certified according to the global safety standards IEC/EN/UL 62368-1, IEC/EN/UL 61010- 1 and IEC/EN/UL/CSA 61010-2-201. Electromagnetic radiated and conducted emissions are compliant to heavy industrial EN 61000-6-4 Class B emission standard and EN 61000-6-2 immunity standard.

SELECTION GUIDE

Part Number	Input Voltage Range [VAC]	Output Voltage nom. [VDC]	Adjustable Output Voltage [VDC]	Output Current nom. [A]	Efficiency (1) typ. [%]	rated Output Power (2) [W]
RACPRO1-T480/24	3x 320-575	24	24-28	20	95	480
RACPRO1-T480/48	3x 320-575	48	48-56	10	94	480

Note1: Efficiency is tested at nominal input (400/480VAC) and full load at +25°C ambient.
Note2: Thermal Power Bonus 120% (T_{AMB}= 45°C max.), and Boost Power 150%/7.5sec max.; refer to **„Boost Power“**.

copyright © RECOM Power GmbH, all rights reserved

RACPRO1-T480 Series ◊ 3AC DIN-Rail Power Supply

480W ◊ Input: 400-480VAC nom. / 450V-815VDC

RECOM AC/DC Converter

ACCESSORIES

Part Number	Description	Datasheet Link
RACPRO1-4SP/24V/5A	electronic circuit breaker; 4-channel; input voltage DC 24 V adjustable output current 1.75-5.75A and selectable NEC Class 2 mode	RACPRO1-4SP/24V/5A.pdf
RACPRO1-4SP/24V/10A	electronic circuit breaker; 4-channel; input voltage DC 24 V; adjustable output current 3.5-11.5A	RACPRO1-4SP/24V/10A.pdf
RACPRO1-RD40	highly efficient n+1 redundancy or decoupling diode module 2 x 20A or 1 x 40A for power supplies with 12V, 24V or 48V output voltage	RACPRO1-RD40.pdf

BASIC CHARACTERISTICS (measured @ T_{AMB}= 25°C, 3AC 400VAC full load and after warm-up unless otherwise stated)

Parameter	Condition		Min.	Typ.	Max.
Nominal Input Voltage	50/60Hz		400VAC		480VAC
Operating Range (3)	3 phase operation (4)		320VAC		575VAC
	2 phase operation, max. P_{OUT}= 340W		350VAC		480VAC
	DC input refer to **„Connections for DC-operation“**	continuous	450VDC		815VDC
		10s max.			850VDC
Turn-on Voltage	prevents switching on during 1AC operation		310VAC		
	DC operation		440VDC		
Turn-off Voltage	AC operation		280VAC		
	DC operation		395VDC		
Input Current	AC operation	400VAC			3x 0.8A
		480VAC			3x 0.7A
	DC operation	500VDC			1.0A
Inrush Current	3AC 400VAC, cold start				10A
No Load Power Consumption	3AC 400VAC	RACPRO1-T480/24		1.9W	3W
		RACPRO1-T480/48		2.4W	
	3AC 480VAC	RACPRO1-T480/24		2W	
		RACPRO1-T480/48		2.9W	
Input Frequency Range			47Hz		63Hz
Nominal Output Voltage (factory set)	RACPRO1-T480/24			24VDC	
	RACPRO1-T480/48			48VDC	
Minimum Load			0%		
Power Factor	full load			0.92	
Start-up time	2 & 3 phase operation, 400VAC			98ms	112ms
Rise time				3.5ms	7ms
Hold-up time	400VAC			15ms	
	480VAC			30ms	
Internal Operating Frequency				83kHz	
Ripple and Noise	20MHz bandwidth	RACPRO1-T480/24			1% of nom V_{OUT}
		RACPRO1-T480/48			0.5% of nom V_{OUT}

Note3: The products were submitted for safety files at AC and DC-Input operation. (350V-575VAC and 450-600VDC)
If input voltage is >500VDC consider an external fuse according to applicable standards.
2phase operation is not included in the safety approvals. Additional tests might be necessary when the complete application has to be approved according to UL 62368-1, 61010-1 and UL 61010-2-201.

Note4: Output power derating for Line-input of less than 3AC 350VAC (derate linearly from 100% at 350VAC to 90% at 3AC 320VAC)

Connections for DC-operation

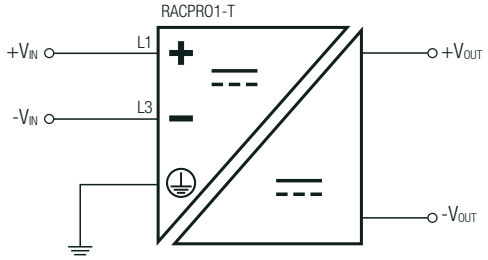

copyright © RECOM Power GmbH, all rights reserved

BASIC CHARACTERISTICS (measured @ T_{AMB}= 25°C, 3AC 400VAC full load and after warm-up unless otherwise stated)

RACPRO1-T480/24

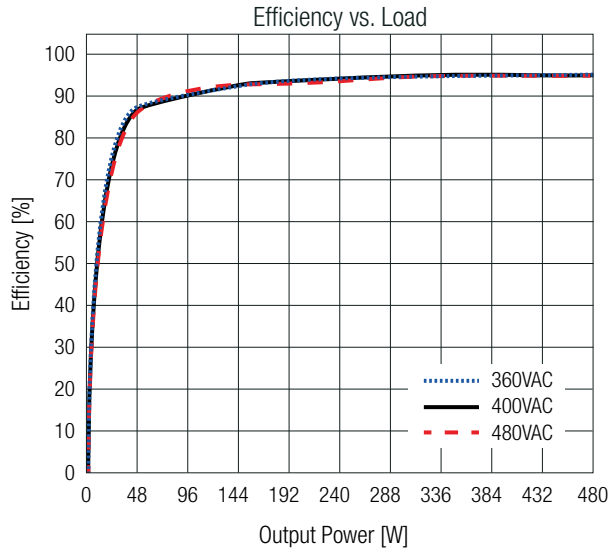

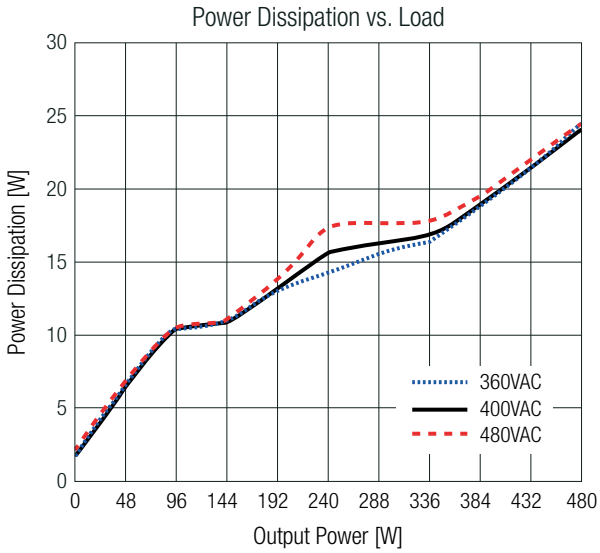

RACPRO1-T480/48

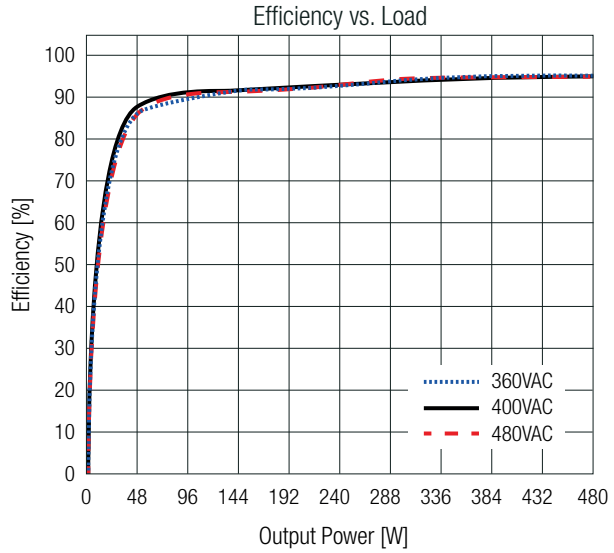

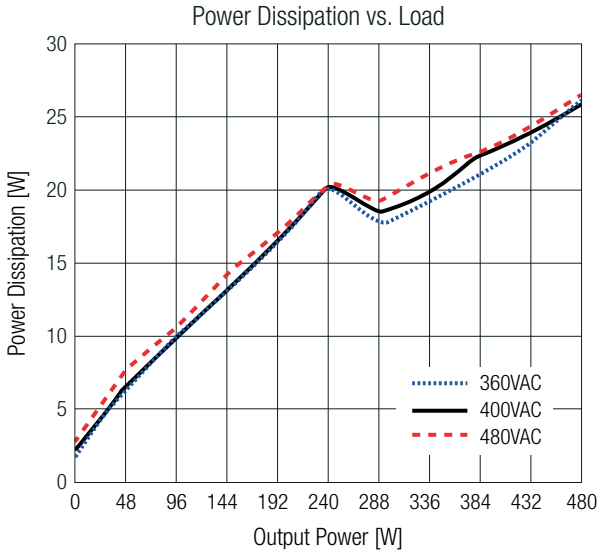

ADDITIONAL FEATURES

Parameter	Condition		Value
Output Voltage Adjustability [5]	on-board potentiometer	RACPRO1-T480/24	24-28VDC
		RACPRO1-T480/48	48-56VDC
Parallel Load Share Mode	refer to **„DIP-SWITCH SETTINGS“**		
Boost Power	refer to **„Boost Power“**		150% for 7.5s
CC/CV Mode	DIP-Switch 2 “ON”; limited to T_{AMB} max. 60°C, to maintain reliability Refer to **„CC/CV Mode“**		typ. 100% $I_{OUTLIMIT}$ continuous
Load Indication LED	LED green, refer to **„Load Indication LED“**		normal mode
	LED off		abnormal mode, no operation or failure
DC-OK LED	LED green		output voltage ok, normal mode
	LED off		abnormal mode, no operation or failure
Signal Contact	closed		normal mode
	open		abnormal mode, no operation or failure
Signal Contact Rating	do not connect signaling contact to hazardous voltages	RACPRO1-T480/24	30VDC/0.1A
		RACPRO1-T480/48	60VDC/0.1A

Note5: When input voltage is below 350VAC, the output voltage is limited to 24/48VDC.
Make sure that the maximum rated output power will not be exceeded when trimming up.

copyright © RECOM Power GmbH, all rights reserved

DIP-SWITCH SETTINGS

	DIP1	DIP2	
Single Mode (Factory set) Power Boost Mode available, refer to **„Boost Power“**	OFF	OFF	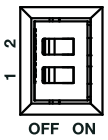
Parallel Load Share Mode Angled output characteristic for load sharing. Voltage drop from 0 to nom. I_{OUT}: 1.2V	ON	OFF	
Constant Current Mode Current Limitation strictly at nominal current. Refer to **„CC/CV Mode“**	OFF	ON	
Not recommended! Power supply will operate in parallel load share with CC/CV mode.	ON	ON	

U/I Factory Setting (Single Mode)

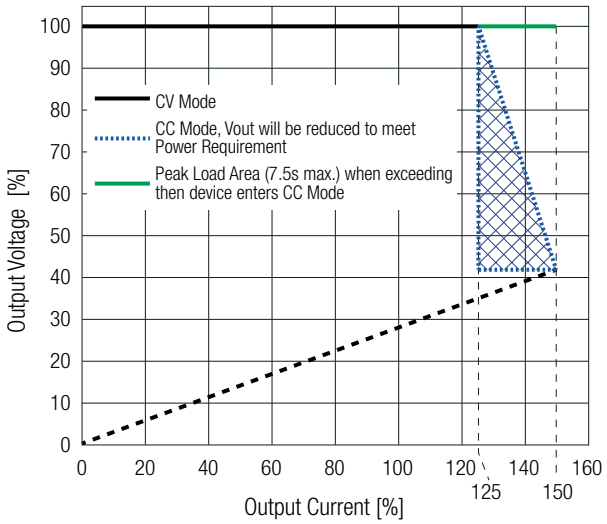

CC/CV Mode

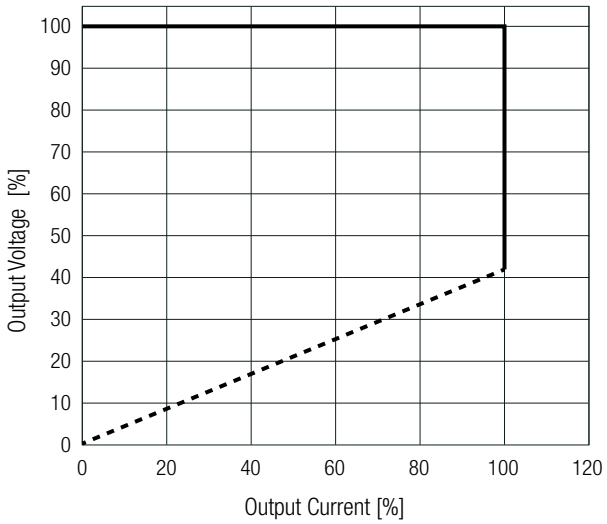

LOAD INDICATION LED

4 LEDs displaying actual and target current of rated output current.

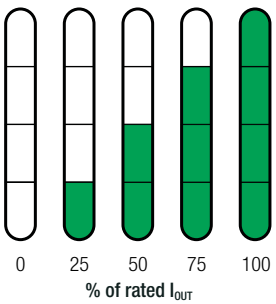

copyright © RECOM Power GmbH, all rights reserved
www.recom-power.com

REGULATIONS (measured @ T_{AMB}= 25°C, 3AC 400VAC full load and after warm-up unless otherwise stated)

Parameter	Condition	Value
Output Accuracy		±1.0% max.
Line Regulation	low line to high line, full load	±0.1% typ.
Load Regulation	0% to 100% load	±0.3% typ.
Max. Capacitive Load (start-up)	RACPRO1-T480/24	40mF
	RACPRO1-T480/48	20mF
Transient Response	10-100% load	±3.0% typ.
	recovery time	100ms typ.

PROTECTIONS (measured @ T_{AMB}= 25°C, 3AC 400VAC full load and after warm-up unless otherwise stated)

Parameter	Type		Value
Internal Input Fuse	DC compliant		2x T5A, slow-blow
Easy Fuse Tripping	refer to **„Easy Fuse tripping“**		250%/20ms
External Input Protection	3-phase circuit breaker with a minimum of 6A and a maximum of 16 A, characteristic B or C; or a circuit breaker for motor protection with a maximum of 16A, trip class 10		
Short Circuit Protection (SCP)			hiccup mode, auto recovery
Over Voltage Protection (OVP)	SELV output	RACPRO1-T480/24	35VDC, latch off
		RACPRO1-T480/48	59.8VDC, latch off
Return Voltage Immunity	continuous	RACPRO1-T480/24	35VDC max.
		RACPRO1-T480/48	63VDC max.
	<5 min	RACPRO1-T480/24	38VDC max.
		RACPRO1-T480/48	68VDC max.
Absorbing Energy	RACPRO1-T480/24		1.5J
	RACPRO1-T480/48		1J
Over Voltage Category (OVC)			OVC II (5000m)
			OVC III (2000m)
Over Current Protection (OCP)	<7.5 sec		>150% of rated load current, hiccup mode, auto recovery
	<20ms [6]		>250% of rated load current, hiccup mode, auto recovery
Class of Equipment			Class I with PE connection
Isolation Voltage (safety certified) [7]	tested for 1 minute	I/P to O/P	4kVAC / 5kVDC
		I/P to PE	1.6kVAC / 2.5kVDC
		O/P to PE	500VAC / 700VDC
Isolation Resistance	I/P to O/P		4.5MΩ min.
Insulation Grade			reinforced
Input/Output Separation [8]			SELV/ES1
Earth Leakage Current	400VAC/50Hz		1.43mA typ.

Note6: RACPRO1-T480/24 = 19VDC min.; RACPRO1-T480/48= 40VDC min.

Note7: For repeat Hi-Pot testing, reduce the time and/or the test voltage.

Note8: The product has been tested in accordance with EN IEC 61010-2-201:2024, and the output circuit complies with the generally applicable requirements and limits for Safety Extra-Low Voltage (SELV) as defined in IEC 60364-4-41. By additionally connecting the output circuit to earth in accordance with the relevant standards, the output circuit can be designated as a PELV circuit.

copyright © RECOM Power GmbH, all rights reserved

PROTECTIONS (measured @ T_{AMB}= 25°C, 3AC 400VAC full load and after warm-up unless otherwise stated)

Easy Fuse tripping

(400V-480VAC or 500VDC; -40°C to +60°C max.)

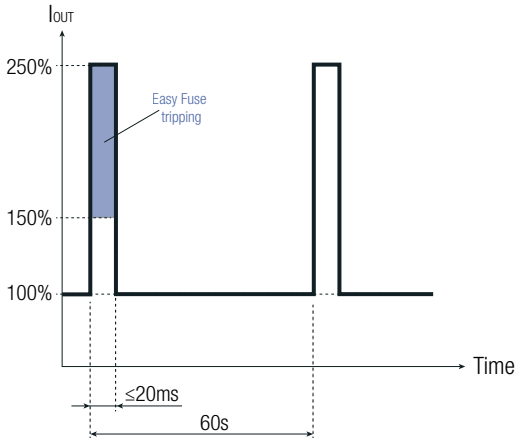

ENVIRONMENTAL (measured @ T_{AMB}= 25°C, 3AC 400VAC full load and after warm-up unless otherwise stated)

Parameter	Condition		Value
Operating Ambient Temperature Range	@ natural convection (0.1m/s)	with derating	-40°C to +70°C
		without derating	refer to **„Derating Graph“**
Operating Altitude [8]			5000m
Operating Humidity	non-condensing		95% RH max.
Pollution Degree			PD2
IP Rating			IP20
Shock	according to IEC 60068-2-27 Fa	non-operating	15G/11ms, 3 times (positive/negative) in all axis
Vibration	according to IEC 60068-2-6 Fc	non-operating	5–8.4Hz: displacement increasing from 3.5mm to 14mm peak-to-peak 8.4–150Hz: constant acceleration 2G, 10 cycles/axis (min-max-min), 1 octave/min
MTBF	according to EN/IEC 61709 (SN29500), T_{AMB}= 40°C		705 x 10^3 hours
Design Lifetime	T_{AMB}= 40°C @ 100% Load		80 x 10^3 hours

Note8: Recognized by safety agency for safe operation up to 5000m. High altitude operation may impact the performance and lifetime

Derating Graph

(@ Chamber and natural convection 0.1m/s; standard mounting orientation)

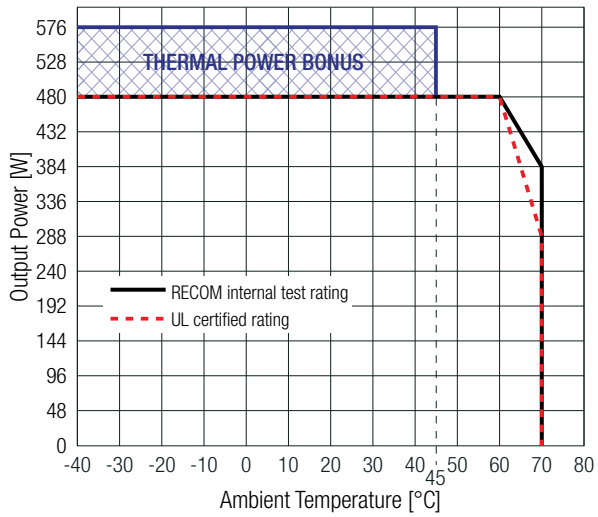

Altitude Derating

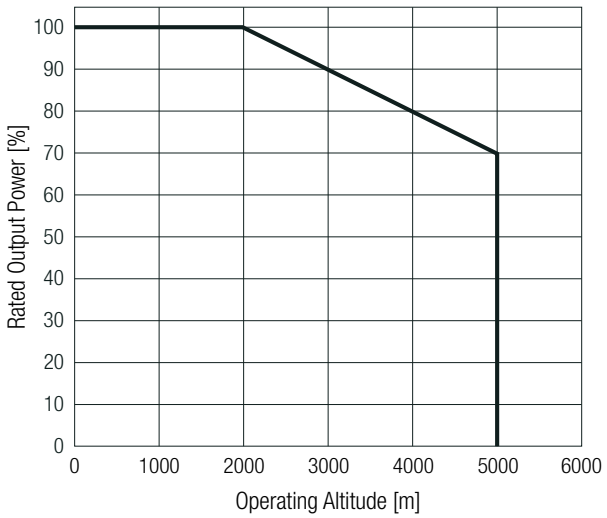

copyright © RECOM Power GmbH, all rights reserved

ENVIRONMENTAL (measured @ T_{AMB}= 25°C, 3AC 400VAC full load and after warm-up unless otherwise stated)

Boost Power

(400V-480VAC or 500VDC; -40°C to +60°C max.)

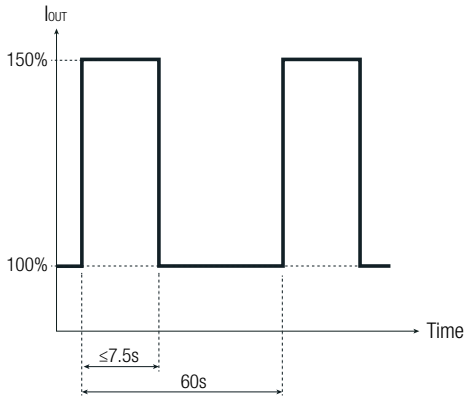

SAFETY & CERTIFICATIONS

Certificate Type (Safety)	Report Number	Standard
Audio/Video, information and communication technology equipment - Part 1: Safety requirements (CB)	24TH0201_62368-1_0	IEC62368-1:2018 3rd Edition
Audio/Video, information and communication technology equipment - Part 1: Safety requirements		EN IEC 62368-1:2020+A11:2020
Audio/Video, information and communication technology equipment - Part 1: Safety requirements	E224736-A6031-UL	UL62368-1:2019 3rd Edition CAN/CSA-C22.2 No. 62368-1-19 3rd Edition
Electrical Equipment For Measurement, Control, and Laboratory Use; Part 1: General Requirements (CB)	4TH0201_61010-1_0	IEC61010-1:2010+A1:2016 3rd Edition
Electrical Equipment For Measurement, Control, and Laboratory Use; Part 1: General Requirements		EN61010-1:2010+A1:2019
Electrical Equipment For Measurement, Control, and Laboratory Use; Part 1: General Requirements	E470721-Vol5-Sec1	UL61010-1:2012 3rd Edition CAN/CSA-C22.2 No. 61010-1-12 3rd Edition
Electrical Equipment For Measurement, Control, and Laboratory Use; Part 2-201: Particular requirements for control equipment (CB)	24TH0201_61010-2-201_0	IEC61010-2-201:2017 2nd Edition
Electrical Equipment For Measurement, Control, and Laboratory Use; Part 2-201: Particular requirements for control equipment		EN IEC 61010-2-201:2018
Electrical Equipment For Measurement, Control, and Laboratory Use; Part 2-201: Particular requirements for control equipment	E470721-Vol5-Sec1	UL61010-2-201:2018 2nd Edition CAN/CSA-C22.2 No. 61010-2-201:2018-02-01
RoHS2		RoHS 2011/65/EU + AM2015/863

EMC Compliance according to IEC/EN61000-6-4/6-2	Condition		Standard / Criterion
Electromagnetic compatibility (EMC) - Part 6-2: Generic standards - Immunity standard for industrial environments			IEC/EN61000-6-2:2019
Electromagnetic compatibility (EMC) - Part 6-3: Generic standards - Emission standard for residential area			IEC/EN 61000-6-3:2021
ESD Electrostatic discharge immunity test	Air: ±8kV; Contact: ±6kV		IEC61000-4-2:2008, Criteria A EN61000-4-2:2009, Criteria A
Radiated, radio-frequency, electromagnetic field immunity test	10V/m (80-1000MHz)		IEC/EN61000-4-3:2006+A2:2010, Criteria A
Fast Transient and Burst Immunity	AC Power Port: ±4kV DC-Output Port: ±2kV		IEC/EN61000-4-4:2012, Criteria A
Surge Immunity	AC-Power Port:	L1-L2, L1-L3, L2-L3: ±2.5kV L1-PE,L2-PE,L3-PE: ±6kV	IEC/EN61000-4-5:2014+A1:2017, Criteria A
	DC-Output Port:	Vout(+) - Vout(-): ±1kV Vout(+)-PE, Vout(-)-PE: ±1kV	
Immunity to conducted disturbances, induced by radio-frequency fields	10Vrms (0.15-80MHz)		IEC61000-4-6:2013, Criteria A EN61000-4-6:2014, Criteria A
Power Magnetic Field Immunity	30A/m, 50/60Hz		EN61000-4-8:2010, Criteria A
Voltage Dips	400VAC, 50Hz	100%, 5 cycle; 70%, 10 cycles; 40%, 25 cycles; 30%, 25 cycles	IEC61000-4-11:2004+A1:2017, Criteria B
Voltage Interruptions	400VAC, 50Hz	100%, 250 cycles	IEC61000-4-11:2004+A1:2017, Criteria B
Voltage Sag	80% of 3x 400VAC, 1000 ms 70% of 3x 400VAC, 500 ms 5% of 3x 400VAC, 200 ms		SEMI F47-0706, Sec. 7.1 procedure per EN 61000-4-11, Criteria A

copyright © RECOM Power GmbH, all rights reserved

RACPRO1-T480 Series ◊ 3AC DIN-Rail Power Supply

480W ◊ Input: 400-480VAC nom. / 450V-815VDC

RECOM AC/DC Converter

SAFETY & CERTIFICATIONS

EMC Compliance according to IEC/EN61000-6-4/6-2	Condition	Standard / Criterion
Limits of Harmonic Current Emissions		EN IEC 61000-3-2:2019
Limits of Voltage Fluctuations & Flicker		EN61000-3-3:2013+A1:2017

DIMENSION & PHYSICAL CHARACTERISTICS

Parameter	Type	Value
Material	chassis	polycarbonate (UL94 V-0) / aluminum
Dimension (HxWxD)		135.0 x 52.0 x 155.7mm 5.3 x 2.0 x 6.1 inch
Weight		768g 1.69 lbs

Dimension Drawing (mm)

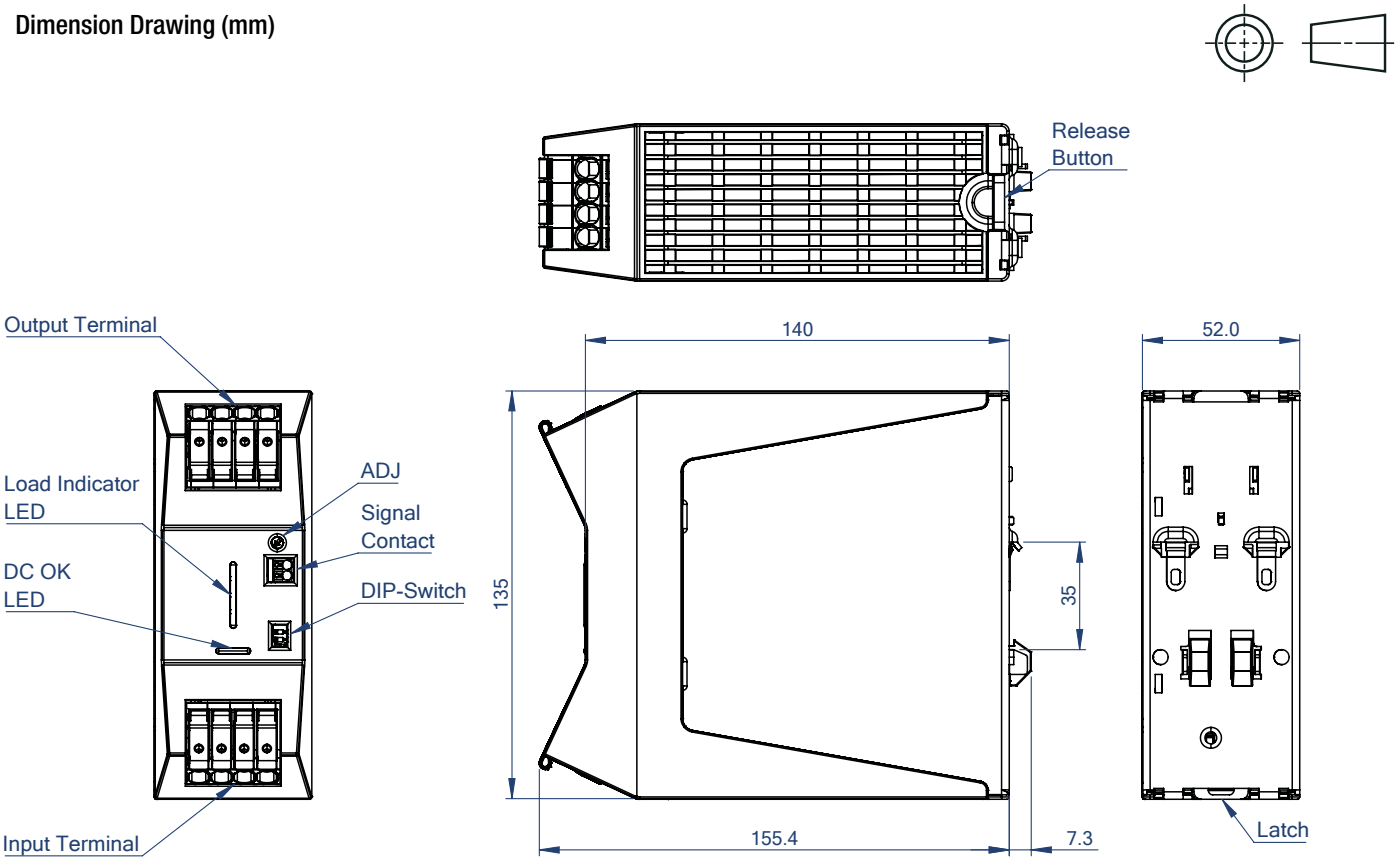

Tolerance: ±0.5mm

Input & Output Cage Clamp [9]

Function	AWG	mm²
L1, L2, L3	24-8	0.25-6
PE ⏚	24-8	0.25-6
+1, +2 (Vout)	24-8	0.25-6
-1, -2 (Vout)	24-8	0.25-6
Wire stripping length: 12-13mm		

Push-In Signal Terminal [9, 10]

Function	AWG	mm²
Signal (13,14)	24-16	0.25-1.5
Wire stripping length: 8-9mm		

Wire Pull-Out Test Force - Input & Output Clamp

Standard	Conductor Size	Test Force
UL 1059 / UL 486E	24 AWG	13.4 N
	12 AWG	60 N
IEC 60947-7-4	0.2mm²	10 N
	6mm²	80 N
	10mm²	90 N

Note9: It is recommended to use flexible (stranded) or solid cables with the above mentioned cross-section.
Use copper conductors designed for an operating temperature of at least 90°C. Supported copper conductor categories: Class 1, 2 and 5

Note10: Do not connect signaling contact to hazardous voltages. Ferrules are required for flexible cables.

copyright © RECOM Power GmbH, all rights reserved

INSTALLATION & APPLICATION

Mounting Instruction

Mounting Rail: Standard TS35 DIN Rail in accordance with EN 60715.

Mounting

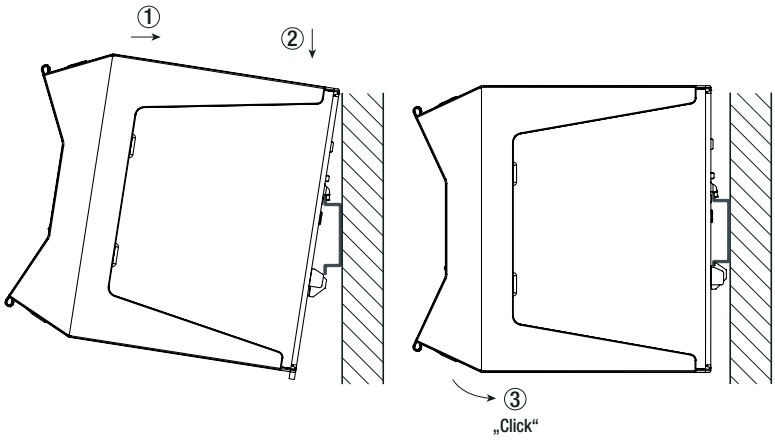

1. Place the device on the DIN rail with a slight upward tilt. Snap the device into the DIN rail.
2. Now tilt the device downwards until it reaches the lower part of the DIN rail.
3. Press the lower part of the device firmly against the rail until the device locks into position on the DIN rail.
4. To make sure it is securely locked in place, give the device a gentle shake.

Release Option 1 (tool-less)

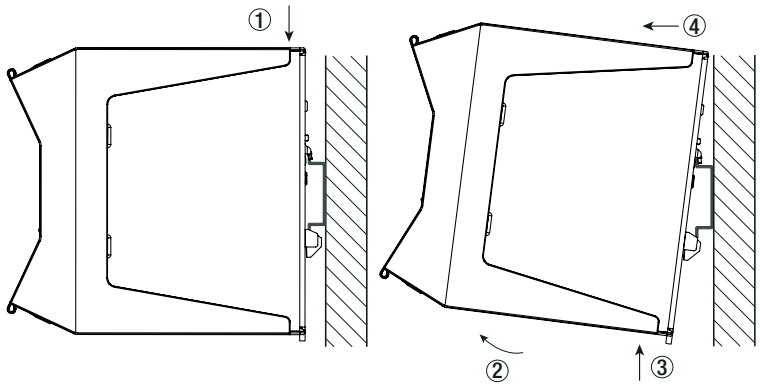

1. Press the unlock button on the top of the device to release the latch from the rail.
2. While pushing the button, slightly tilt the device forward.
3. Pull the device away from the DIN rail by pushing it up
4. Remove the power supply completely from the rail.

Release Option 2 (by using a screwdriver)

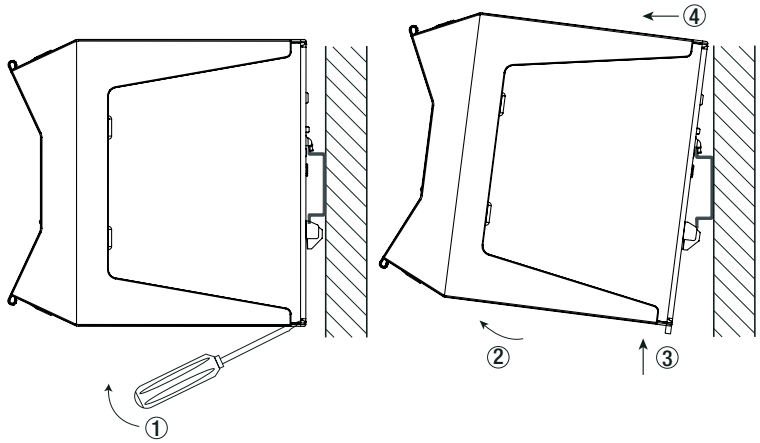

1. Pull the DIN rail latch by using a screwdriver OUT of the device and HOLD it.
2. Tilt the bottom of the device OUT.
3. Pull the device away from the DIN rail by pushing it up.
4. Remove the power supply completely from the rail.

copyright © RECOM Power GmbH, all rights reserved

INSTALLATION & APPLICATION

Installation Instructions

To guarantee sufficient convection cooling, keep a distance of 40mm above and 20mm below the device.

For vertical mounting the device should be installed with the input terminal on the bottom (= standard orientation).

For all other mounting orientations, the maximum output power must be reduced by 15% of the nominal power.

No space between supplies are required.

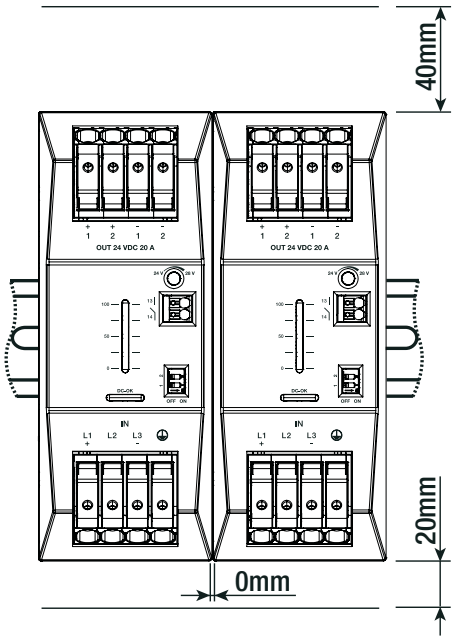

Phase redundancy

1) If one phase fails, operation is still guaranteed. (2-phase operation) Maximum Output power: 340W!

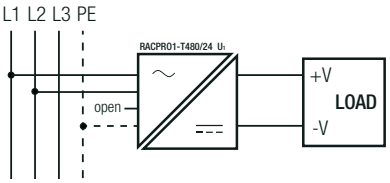

Parallel operation for increasing output power 1+n

1) Make sure that the DIP-Switch 1 is “ON” to get into the Parallel Load sharing mode.
2) Adjust each power supply to the exact same output voltage with same load and cooling conditions.
3) Use the same wire length and cable cross-section for each power supply (star connection) and energize all units at the same time to avoid triggering overload protection.
4) A 10% safety margin may be recommended because the power distribution may be slightly asymmetrical depending on the cabling.
5) **ATTENTION:** To prevent high reverse currents in the event of a secondary output fault, it is recommended to install a protective circuit at the output of each device when more than two power supplies are connected in parallel (e.g. decoupling diode or DC fuse). Leakage current, EMI, inrush current, harmonics will increase when using multiple power supplies.

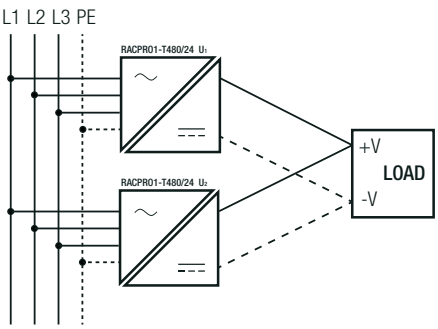

copyright © RECOM Power GmbH, all rights reserved
www.recom-power.com

INSTALLATION & APPLICATION

Parallel operation for redundancy 1+1

1) Adjust each power supply to the exact same output voltage with same load and cooling conditions.
2) Use the same wire length and cable cross-section for each power supply (star connection) and energize all units at the same time to avoid triggering overload protection.
3) It must be ensured that one of the power supply is able to provide the total required output power of the DC load to be supplied.
4) In normal operation, each of the two power supplies will be utilized by up to 50%.
5) **ATTENTION:** To prevent high reverse currents in the event of a secondary output fault, it is recommended to install a protective circuit at the output of each device when more than two power supplies are connected in parallel (e.g. decoupling diode or DC fuse).
Leakage current, EMI, inrush current, harmonics will increase when using multiple power supplies.

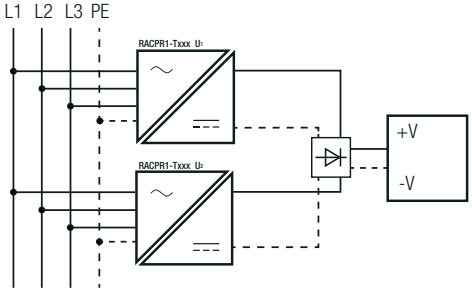

Please Note: This basic redundancy configuration does not protect against internal short circuits on the secondary side. In such cases, the faulty unit may draw current from the remaining supplies, resulting in loss of output regulation. To prevent this, use redundancy modules with integrated decoupling elements. RECOM offers the **RACPRO1-RD40** redundancy module as a suitable solution for this purpose:

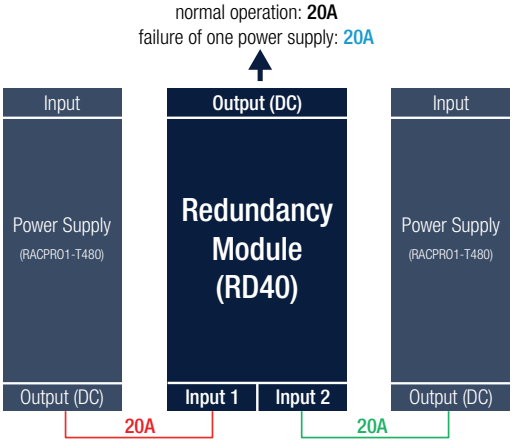

Series Operation

1) Only use PSU with the same type and performance class with identical parameters.
2) To increase the DC output voltage, connect 2 or more power supply units in series. (RECOM recommended 3 units max.)
3) Therefore, negative output terminal "-1" of the first power supply unit must be connected to the positive output terminal "+1" of the second power supply unit and routed to the load. Depending on the common output-side earth reference point of the power supply unit, see below examples:
4) **ATTENTION**: Leakage current, EMI, inrush current, harmonics will increase when using multiple power supplies.

2 PSU's in series:	**Figure 1**	**Figure 2**	**Figure 3**
RACPRO1-T480/24	+48Vdc	-48Vdc	±24Vdc
RACPRO1-T480/48	+96Vdc	-96Vdc	±48Vdc

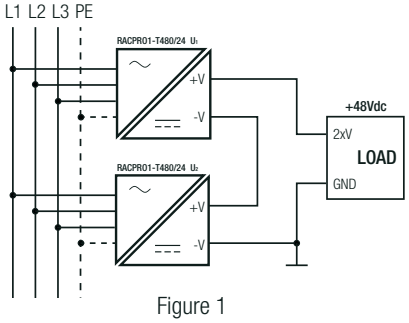

Figure 1

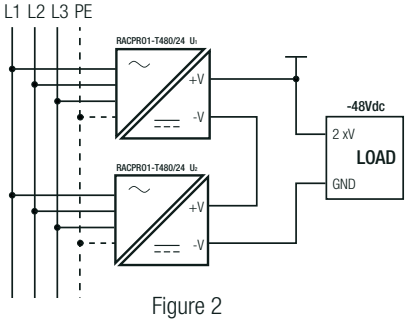

Figure 2

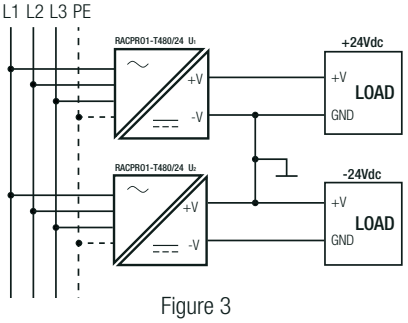

Figure 3

copyright © RECOM Power GmbH, all rights reserved

RACPRO1-T480 Series ◊ 3AC DIN-Rail Power Supply

480W ◊ Input: 400-480VAC nom. / 450V-815VDC

RECOM AC/DC Converter

BLOCK DIAGRAM

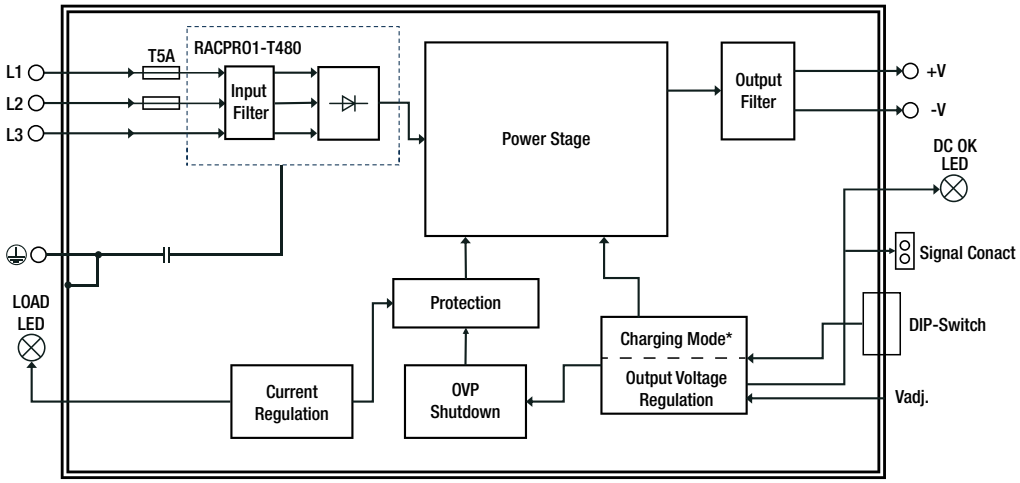

PACKAGING INFORMATION

Parameter	Type	Value
Packaging Dimension (LxWxH)	cardboard box	180 x 175 x 70mm
Packaging Quantity		1 pc
Storage Temperature Range		-40°C to +85°C
Storage Humidity	non-condensing	85% RH max.

The product information and specifications may be subject to changes even without prior written notice.The product has been designed for various applications; its suitability lies in the responsibility of each customer. The products are not authorized for use in safety-critical applications without RECOM's explicit written consent. A safety-critical application is an application where a failure may reasonably be expected to endanger or cause loss of life, inflict bodily harm or damage property. The applicant shall indemnify and hold harmless RECOM, its affiliated companies and its representatives against any damage claims in connection with the unauthorized use of RECOM products in such safety-critical applications.

copyright © RECOM Power GmbH, all rights reserved